WANG

3110

SEAGATE TECHNOLOGY ST406/412 MICROWINCHESTER MAINTENANCE MANUAL

Customer Engineering Reprint
Product Maintenance Manual

729-1282

SEAGATE TECHNOLOGY

ST-406/412 MICROWINCHESTER SERVICE MANUAL JANUARY 14, 1983

360 El Pueblo Road • Scotts Valley, CA 95066 • Phone: (408) 438-6550

PREFACE

This document refers to the Seagate Technology OEM Maintenance Manual for the ST-400 product family. The scope of this manual reflects the type of maintenance philosophy selected for this product. Throughout this manual the product family is referred to as the ST-4XX series. Current products specifically covered by this document include the following.

ST-406	6.38MB,	5MB formatted
ST-412	12.7 MB,	10MB formatted

The purpose of this manual is to provide the Wang-trained Customer Engineer (CE) with instructions to operate, troubleshoot and repair the ST-400 product family.

TABLE OF CONTENTS

SECTION		PAGE
1.0	INTRODUCTION	1
1.1	General Description	1
1.2	Specification Summary	2
1.2.1	Physical	2
1.2.2	Reliability	2
1.2.3	Performance	3
1.2.4	Functional	3
2.0	THEORY OF OPERATIONS	4
2.1	General	4
2.1.1	Interface Description	4
2.1.2	Recording Format	6
2.1.3	Track Format	6
2.1.4	Winchester Heads	7
2.1.5	Discs	7
2.1.6	Air Filtration System	7
2.2	Mechanical Theory	8
2.2.1	Track Ø Sensor	8
2.2.2	Index Sensor	8
2.2.3	Ground Spring	8
2.2.4	Spindle Brake	9
2.3	Electrical Theory/Flowchart	10
2.3.1	Motor Speed Control PCB P/N 20099	10
2.3.2	Motor Speed Control PCB P/N 20136	12

SECTION PAGE

2.3.3 MPU Operation.....14
2.3.4 Drive Select.....15
2.3.5 Read Operation.....16
2.3.6 Write Operation.....18
2.3.7 Fault Detection.....19
2.4 Test Point Description.....21
2.4.1 Main Control PCB P/N 20096.....21
2.4.2 Main Control PCB P/N 20110.....24
2.5 Schematics.....27
2.5.1 Main Control PCB P/N 20096.....28
2.5.2 Main Control PCB P/N 20110.....30
2.5.3 Motor Control PCB P/N 20099.....32
2.5.4 Motor Control PCB P/N 20136.....33
3.0 MAINTENANCE/REPAIR.....34
3.1 Introduction.....34
3.2 Removals And Adjustments.....35
3.2.1 Main Control PCB.....35
3.2.2 Motor Control PCB.....35
3.2.3 Spindle Brake.....36
3.2.4 Index Sensor.....36
3.2.5 Ground Spring.....37
3.2.6 Front Cover.....37
3.2.7 Front Cover LED.....38
3.2.8 Side Frame.....38
3.2.9 Track Ø Sensor.....39

SECTION PAGE

4.0 ILLUSTRATED PARTS CATALOG.....40

4.1 Physical Locations.....40

4.1.1 Drive Exploded View, 4 point suspension.....41

4.1.2 Drive Exploded View, 3 point suspension.....42

4.1.3 Connectors Exploded View.....43

4.2 Component Locations.....44

4.2.1 Main Control PCB P/N 20096.....45

4.2.2 Main Control PCB P/N 20110.....46

4.2.3 Motor Control PCB P/N 20099.....47

4.2.4 Motor Control PCB P/N 20136.....48

4.3 Parts Lists.....49

4.3.1 Main Control PCB P/N 20096.....50

4.3.2 Main Control PCB P/N 20110.....52

4.3.3 Motor Control PCB P/N 20099.....54

4.3.4 Motor Control PCB P/N 20136.....55

4.3.5 Spare Parts List.....56

LIST OF ILLUSTRATIONS

FIGURE		PAGE
2.1	Test Point Layout - PCB P/N 20096	22
2.2	Test Point 1 & 2 Timing - PCB P/N 20096	23
2.3	Test Point 3 & 4 Timing - PCB P/N 20096	23
2.4	Test Point 6 Timing - PCB P/N 20096	23
2.5	Test Point Layout - PCB P/N 20110	25
2.6	Test Point 7 & 8 - PCB P/N 20110	26
2.7	Test Point 11 & 13 - PCB P/N 20110	26
2.8	Test Point 4 - PCB P/N 20110	26

SECTION 1 INTRO-DUCTION

1.0 INTRODUCTION

1.1 General Description

The ST-400 series is the second generation of 5-1/4 inch micro-Winchester disc drives from Seagate Technology. Based on the proven design of the world's first micro-Winchester, the ST-506, the new series features greater capacity, performance, and reliability, while maintaining compatibility in form factor and controller design with the earlier model.

Manganese-zinc heads and advanced stepper motor design enable higher track density. The new head design allows increased bit packing, utilizing more of the disc surface and double the number of cylinders. High reliability is assured through the use of a proven metal band actuator, open-loop stepper head positioner, and direct drive brushless DC drive motor. A dynamically balanced motor/spindle assembly and a shock mounted baseplate reduce vibration.

The low mass and load force of Winchester heads and the lubricated, oxide coated media on an aluminum substrate, provide reliable contact start/stop operation. Each disc surface is read by a dedicated read/write head. Fully enclosed discs, heads, and band actuator are protected by an integral recirculation air system with a 0.3 micron absolute filter. Integral to the filter is a port which permits pressure equalization with ambient air while preventing entry of contaminants.

Thermal stabilization delays are not necessary with the ST-400 series. The patented spindle pump assures adequate air flow and uniform temperature distribution throughout the sealed head and disc areas. The stepper and spindle motors are thermally isolated, resulting in a very low temperature rise, providing significantly greater off-track margin and immediate read and write operations after power up.

Only DC voltages (+12 and +5VDC) are required. All electronics are packaged on two printed circuit boards. The boards are mounted outside the sealed media area, allowing quick access and easy field repair without risking media integrity. Simplification of mechanical and electrical design provides a projected service life of more than 11,000 hours MTBF. An advanced stepper motor, metal band actuator and the onboard microcomputer's buffered seek mode improve average access time.

The ST-400 series has the same physical dimensions, recording format, transfer rate, interface, power supply and controller requirements as the industry standard Seagate ST-506. Controllers are available from several sources that provide for interfacing the ST-400 series micro-Winchesters with most popular microcomputers.

1.2 Specification Summary

1.2.1 Physical Specifications

Environmental Limits

Ambient Temperature

Operating:	40° to 122°F (4° to 50°C)
Non-operating:	-40° to 140°F (-40° to 60°C)

Temperature Gradient

Operating:	18°F/hour or 10°C/hour
Non-operating:	Below condensation

Relative Humidity: 8 to 80% non-condensing

Maximum Wet Bulb: 78.8°F (26°C)

Maximum elevation

Operating:	10,000 feet
Non-operating:	-1,000 to 30,000 feet

Shock

Operating:	10G's*
Non-operating:	20G's*

*No mechanical damage will occur within these limits.

D.C. Power Requirements

+12V ±5%, 1.6A typical, 3.5A (At power on)
+5V ±5%, 1.1A typical, 1.7A (Maximum)
Maximum Ripple: 50mV peak to peak (12V, 5V)

Mechanical Dimensions

Height:	3.25 inches
Width:	5.75 inches
Depth:	8.00 inches
Weight:	4.6 pounds (2.1Kg)
Shipping Weight:	9.0 pounds (4.1Kg)

Heat Dissipation

Typical:	25 watts
Maximum:	32 watts

1.2.2 Reliability Specifications

MTBF:	11,000 POH, typical usage
MTTR:	30 minutes
PM:	Not required
Component design life:	5 years

Error Rates

Soft Read Errors*:	1 per 10^{10} bits read
Hard Read Errors**:	1 per 10^{12} bits read
Seek Errors:	1 per 10^{6} seeks

*Recoverable within 16 retries
**Not recoverable within 16 retries

1.2.3 Performance Specifications

Capacity	Model Number ST-406	ST-412
Unformatted		
Per Drive:	6.38 MB	12.76 MB
Per Surface:	3.19 MB	3.19 MB
Per Track:	10,416 Bytes	10,416 Bytes
Access Time		
Average*:	85ms	85ms
Maximum*:	205ms	205ms
Single Track Seek/Settle:	<16.67ms	<16.67ms
Transfer Rate:	5.0 Mbits/sec	5.0 Mbits/sec
Average Latency:	8.33 ms	8.33 ms

*Using buffered seek (includes settling)

1.2.4 Functional Specifications

Rotational Speed:	3,600 RPM±1%	3,600 RPM ±1%
Recording Density:	9,074 BPI	9,074 BPI Max
Flux Density:	9,074 FCI	9,074 FCI Max
Track Density:	345 TPI	345 TPI
Cylinders:	306	306
Tracks:	612	1224
Read/Write Heads:	2	4
Discs:	1	2

SECTION 2 THEORY OF OPERATION

2.0 THEORY OF OPERATIONS

2.1 General

2.1.1 Interface Description

The ST-400 Family supports the industry standard ST-506 interface developed by Seagate Technology. This interface provides many floppy disc similarities in addition to supporting the increased performance requirements of the 5 1/4" Winchester type products.

The interface consists of a 34 pin Control connector, 20 pin Read/Write connector, and a 4 pin DC Power connector. The 34 pin connector provides 10 control signals to the drive and returns 5 status signals to the drive controller. The 20 pin connector handles the MFM data to and from the drive and also supports the -Drive Selected status to the controller. The 4 pin connector provides the +5 and +12Volt supply requirements.
In general, the Control connector is "daisy-chain" terminated throughout the user system while the Read/Write connector is terminated radially. The following tables show the ST-4XX interface requirements.

J1/P1-CONNECTOR PIN ASSIGNMENTS

GND RTN PIN	SIGNAL PIN	SIGNAL DIRECTION	DESCRIPTION
1	2		Reserved
3	4	In	Reserved (Head 2^2)
5	6	In	-Write Gate
7	8	Out	-Seek Complete
9	10	Out	-Track Ø
11	12	Out	-Write Fault
13	14	In	-Head Select 2^0
15	16		Reserved (To J2 Pin 7)
17	18	In	-Head Select 2^1
19	20	Out	-Index
21	22	Out	-Ready
23	24	In	-Step
25	26	In	-Drive Select 1
27	28	In	-Drive Select 2
29	30	In	-Drive Select 3
31	32	In	-Drive Select 4
33	34	In	-Direction In

J2/P2-CONNECTOR PIN ASSIGNMENTS

GND RTN PIN	SIGNAL PIN	SIGNAL DIRECTION	DESCRIPTION
2	1	Out	-Drive Selected
4	3		Reserved
6	5		Reserved
8	7		Reserved (To J1 Pin 16)
10	9		Reserved
12	11		Ground
	13	In	+MFM Write Data
	14	In	-MFM Write Data
16	15		Ground
	17	Out	+MFM Read Data
	18	Out	-MFM Read Data
20	19		Ground

J3/P3-CONNECTOR PIN ASSIGNMENTS

GND RTN PIN	SIGNAL PIN	SIGNAL DIRECTION	DESCRIPTION
2	1		+12 Volts DC
3	4		+ 5 Volts DC

2.1.2 Recording Format

The ST-4XX uses modified frequency modulation (MFM) as the encoding method implemented to record data on the drive. This double-density encoding scheme increases disc data capacity by replacing clock bits with data bits. Clock bits are written only when data bits are not present in both the preceding and the current bit cell. Clock bits are written at the beginning of the bit cell, while data bits are written in the middle.

Due to predictable bit-shift phenomena, write data may require precompensation. This function must be provided by the controller to insure data integrity at the specified error rate. The ST-4XX requires precompensation of write data on cylinders 128 through 305. The data pattern determines which bits must be precompensated. The recommended amount of this precompensation is 12ns for both early and late written bits. All other data patterns are written on time.

2.1.3 Track Format

The track format used on the Seagate ST-4XX disc drive is a slightly modified version of the IBM System 34 double density format. This format is common to many industry standard floppy disc drives. All ST-4XX drives are formatted at the factory before shipping.

As formatted, each sector is identified by an identification field that is different than any other on the drive. The ID field contains cylinder, head, and sector information as well as address mark and error checking polynomials. The Seagate format uses Cyclic Redundancy Checking (CRC) for error evaluation. The format also allows for a plus or minus speed variation of approximately 3%. The ST-4XX specification for spindle speed variation is 1% over the specified environment and power limits.

2.1.4 Winchester Heads

The Seagate Technology ST-4XX uses Manganese/Zinc Ferrite Winchester head technology. The head/flexture (supporting arm) assembly is designed for contact start-stop operation. Bit packing density is 9074 BPI and the radial track density is 345 TPI. The heads, when operational, are supported on an air bearing created by the rotating disc.

The Winchester heads used are loaded toward the disc surface at 9.5 grams. This is the typical value to allow required stability in all operating conditions. The flying height of the heads at the innermost cylinder is 19 microinches with a tolerance of ± 3 microinches. The flying height of the heads at the outermost cylinder is 24 microinches, ± 3 microinches.

The load force of 9.5 grams is sufficient enough so that various mounting orientations of the disc drive will not affect the flying height of the Winchester heads to any significant degree. Additionally, the head/flexture assembly incorporates an extremely low mass design that is resistive to head and/or media damage when shipping.

2.1.5 Discs

The ST-4XX disc drive uses non-removable double sided 5 1/4 inch discs as the recording media. The discs are designed upon current iron oxide technology. The actual disc dimensions are 40mm inside diameter by 130mm outside diameter. Thickness of the magnetic coating is 20 to 40 microinches increasing linearly from the inside diameter to the outside diameter.

The disc surface is coated with a Teflon lubricant 40 to 60 angstroms in thickness. This value is equivalent to a uniform monomolecular film. The disc lubricant has sufficient abrasion resistance to withstand a minimum of 10,000 start/stop cycles. The magnetic discs have a life expectancy of 5 years.

2.1.6 Air Filtration System

All drives manufactured by Seagate Technology incorporate an integral air filtration system. No maintenance or adjustments are needed throughout the life of the drive. The integral 0.3 micron air filter performs two functions. First, the filter maintains Class 100 standards inside the sealed Head/Disc Assembly throughout the life of the drive. Second, an auxillary port allows pressure equalization with ambient air. During normal operation there is no measurable air flow between the HDA and the outside environment.

2.2 Mechanical

2.2.1 Track Ø Sensor

The Track Ø optical interrupter provides an output whenever the Winchester heads are positioned over cylinder Ø. This signal is used by the internal drive control electronics during the power-on auto-recalibrate routine. The Track Ø signal is also output to the drive interface for use by the controller. Note that the signal at the interface is really Track Ø/Phase "A".

The Track Ø optical interrupter incorporates an infrared light-emitting-diode and an infrared sensitive photo-transistor. When the heads are positioned at cylinder Ø, an interrupter arm attached to the stepper motor shaft mechanically breaks the light beam between the two components of the sensor. The sensor will output a valid Track Ø signal as long as the light beam remains broken.

2.2.2 Index Sensor

Once each revolution the Index sensor provides an index pulse to the microprocessor for recalibration, and to the interface of the ST-4XX drive. The Index pulse width depends on the specific Main Control PCB used on the drive: see section 2.4.

The Index sensor used on the ST-4XX drive is of the reluctance transducer type. This cylindrical sensor incorporates a built-in preamplifier. The case of the sensor is grounded electrically which ties the drive DC returns to the drive casting.

The hub of the spindle motor has two metal tabs attached; one is of a ferrous composition and the other is non-magnetic. Each revolution of the spindle motor causes the ferrous tab to pass within close proximity of the Index sensor, therefore inducing the pulse output.

Note: The dimension between the spindle motor tab and the Index sensor is set to 30 mils (.030") at the factory.

2.2.3 Ground Spring

The ST-4XX incorporates a grounding contact between the spindle motor hub and the drive casting. This ground spring performs the task of removing all unwanted static electrical charges from the spindle motor hub.

2.2.4 Spindle Brake

Note: Newer ST-4XX disc drives do not use the Spindle Brake. A revised Motor Control PCB incorporates dynamic braking. In these units, the Motor Control PCB uses the reverse EMF generated by the spindle motor to slow the discs (See section 2.3.2).

The earlier ST-4XX uses an electromechanical brake to slow the spindle motor when DC power is removed. The spindle brake is energized directly from the +12V supply. When +12V is removed from the drive, the brake engages against the spindle motor hub to slow the motor.

The pad contact material is of a rubber-cork composition with wear life designed to exceed 20,000 cycles. When energized, the brake will draw a maximum current of 267 milliamps.

The brake must be adjusted so that the contour of the pad contact matches the spindle motor hub. When disengaged, the dimension between the spindle motor hub and the pad contact should be set at 10 mils (.010").

2.3 Electrical Theory/Flowchart

2.3.1 Motor Speed Control PCB P/N 20099

Block Diagram-

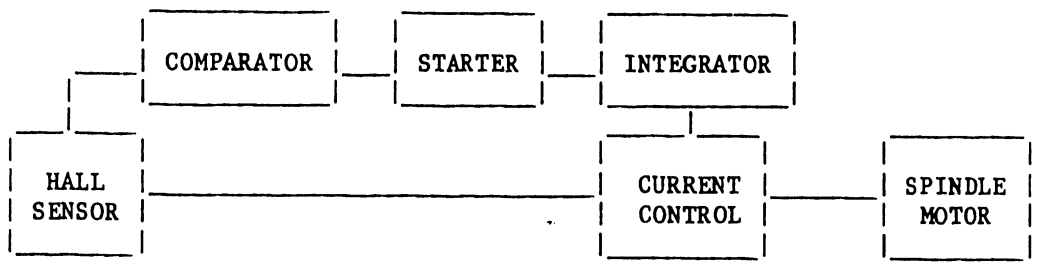

Functional Description-(refer to the schematic on page 32)

Initially, when power is first applied, the disk is stationary and the Hall effect transistor (located inside the spindle motor) will output a high or low level, depending on the physical position of the motor. This DC level will keep Q1 turned off, allowing C5 to charge up. Pin 1 of Comparator A2 will output a low level that travels through R12 and forces pin 7 of A2 high. As a result, A1 will be off and maximum current will flow into the coil selected by the level of the Hall effect sensor.

As the motor speeds up, the Hall effect becomes a square wave responsible for both selecting the motor coil to receive current and controlling the amount of current applied. Current is supplied alternately to coils A and B as the Hall device senses the motors physical position. Depending on the time between high going edges of the Hall effect sensor, Q1 will be turned off long enough for C5 to charge to more than 4 volts and force pin 1 of Comparator A2 low. This low pulse will turn on pin 7 of A1 whose resulting 6 volt output pulse will direct pin 7 of Integrator A2 to allow more current to enter the motor coils.

The sequence of normal operation is as follows:

1) The Hall effect sensor relays speed and position information to the speed error comparator and to the current controller.
2) The speed error comparator, pin 1 of A2, generates a low spike whose duration is dependent on the speed error. A slow speed will result in the low pulse being longer.

3) The speed error information enters the starting circuit which functions to pass a low frequency signal directly to the integrator indicating maximum error during start up. The starting circuit also inverts the speed error information and combines it with a carrier that properly biases the integrator.
4) Pin 7 of Integrator A2 translates the error information into a level appropriate for biasing both halves of IC A1, which functions to control the current source.
5) The current control, IC A3, supplies the proper amount of current for attaining proper speed as directed by IC A1.

2.3.2 Motor Speed Control/Dynamic Brake PCB P/N 20136

Block Diagram -

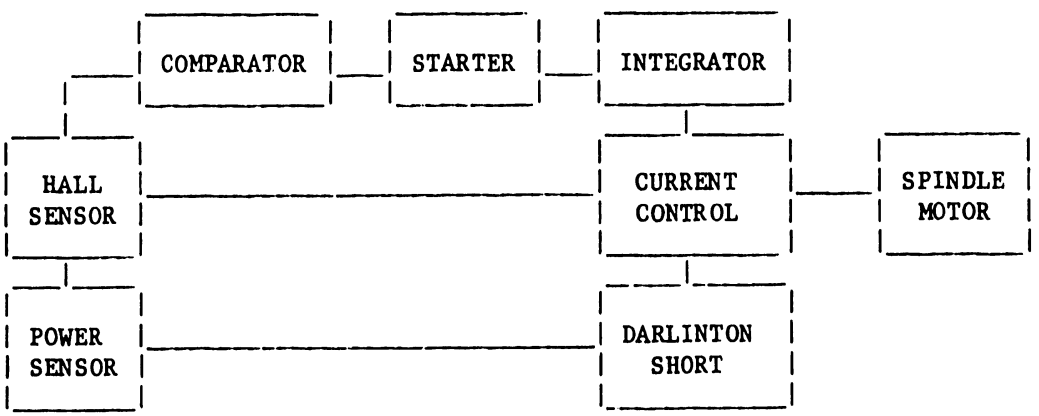

Functional Description-(refer to the schematic on page 33)

Initially, when power is first applied, the disk is stationary and the Hall effect transistor (located inside the spindle motor) will output a high or low level, depending on the physical position of the motor. This DC level will keep Q1 turned off, allowing C5 to charge up. Pin 1 of Comparator 2A will output a low level that travels through R12 and forces pin 7 of 2A high. As a result, 1A will be off and maximum current will flow into the coil selected by the level of the Hall effect sensor. Q2 acts as a limiter to keep the starting current down to 3.5 Amps max.

As the motor speeds up, The Hall effect becomes a square wave responsible for both selecting the motor coil to receive current and controlling the amount of current applied. Current is applied alternately to coils A and B as the Hall device senses the motor position. Depending on the time between high going edges of the Hall effect sensor, Q1 will be turned off long enough for C5 to charge to more than 4 volts and force pin 1 of Comparator 2A low. This low pulse will turn on pin 7 of 1A whose resulting 6 volt output pulse will direct pin 7 of Integrator 2A to allow more current to enter the motor coils.

The sequence of normal operation is as follows:

1) The Hall effect sensor relays speed and position information to the speed error comparator and to the current controller.
2) The speed error comparator, pin 1 of 2A, generates a low spike whose duration is independent of the speed error. A slow speed will

result in the low pulse being longer.
3) The speed error information enters the starting circuit which functions to pass a low frequency signal directly to the integrator indicating maximum error during start up. The starting circuit also inverts the speed error information and combines it with a carrier that properly biases the integrator.
4) Pin 7 of Integrator 2A translates the error information into a level appropriate for biasing both halves of IC 1A, which functions to control the current source.
5) The current control, Q3 and Q4, supplies the proper amount of current for attaining proper speed as directed by IC 1A.

Functional description-Dynamic Brake (schematic page 34)

On power up, C13 is charged to just below 12 volts and Q7 remains off. When the power is shut off or drops below 12 volts for a period, C13 discharges through Q7 turning on the darlington pair, Q5 and Q6. This effectively shorts the motor coils and magnetically brakes the motor.

2.3.3 MPU Operation

Block Diagram-

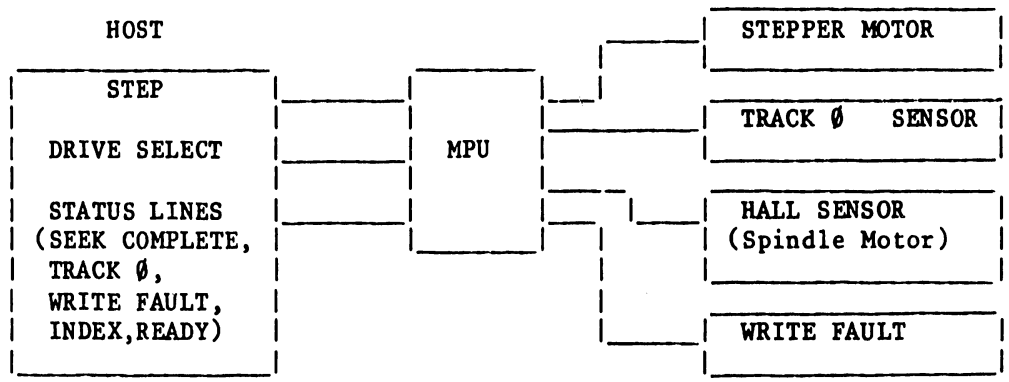

Functional Description-

The ST-4XX family uses a microprocessor to monitor most of the drive functions and interface with the host controller. Primary processor duties are as follows:

1. Count the 666 revolutions required after power up for the "up to speed" function.

2. Monitors the TRACK Ø sensor and automatically recalibrates the drive to TRACK Ø.

3. Accepts step pulses, performs necessary buffering of the pulses, then determines the proper algorithm to perform the stepping required.

4. When the DRIVE SELECT line is active; receives control signals from the host controller and gates status signals in return (See the Interface Description, section 2.1.1).

2.3.4 Drive Selection

Block Diagram-

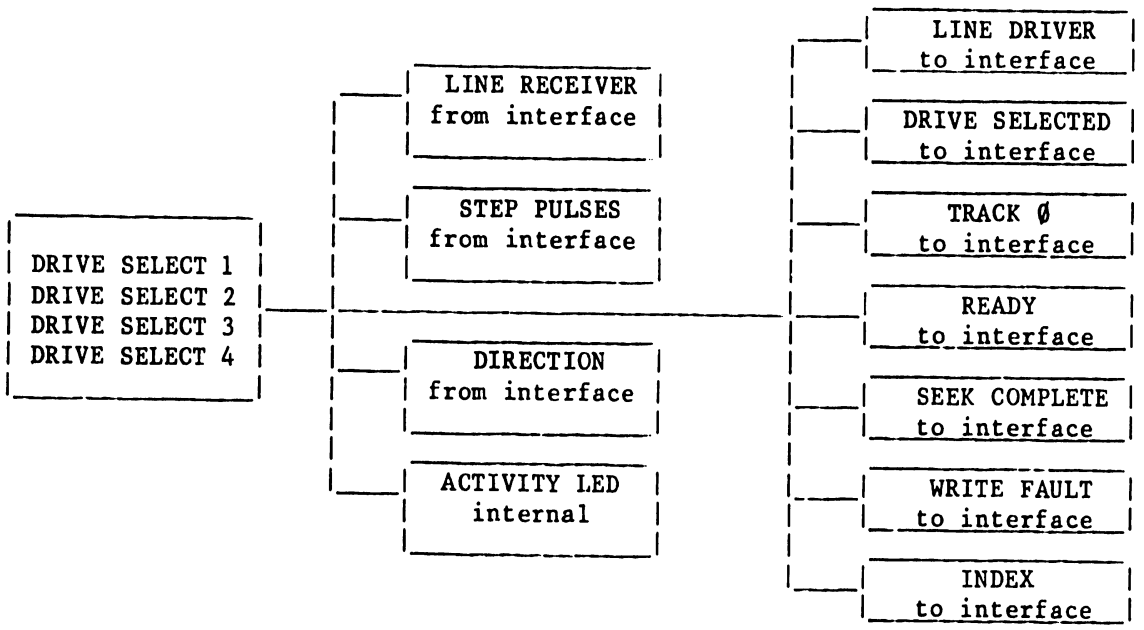

Functional Description-

Drive Select serves only to gate other signals to or from the drive interface. Without Drive Select, the drive cannot read, write, or seek.

2.3.5 Read Operation

Block Diagram-

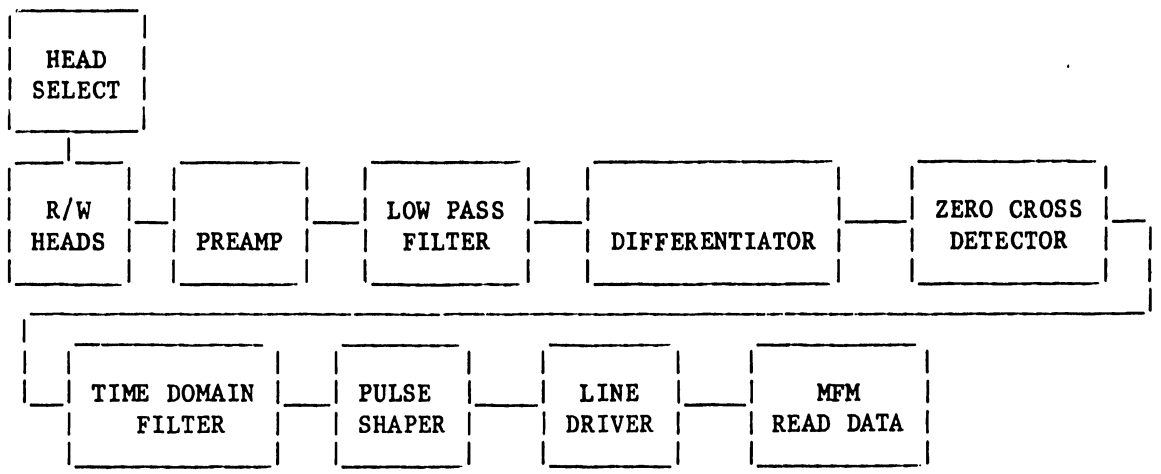

Functional Description-

In order to read, the following conditions must be true:

1) Write Gate inactive.
2) Write Fault inactive.
3) Drive Select active.
4) Head Select active.

The binary decoder decodes the two Head Select lines, the Write Gate line, and the Write Fault line. Assuming Write Gate is inactive and there is no write fault, the inactive state of both head select lines will select head Ø. The center tap of the selected head is set to approximately +5 volts by the use of series resistors. By changing the reference to +5 volts, 0 volts appears as -5 volts and the use of an actual negative voltage is precluded. Raw data riding on the +5 volt signal is amplified by the differential two-stage amplifier before entering the low pass filter which attenuates the higher unused frequencies.

The differentiator shifts the data by 90° causing the data peaks to become zero crossings. The zero crossing detector senses this and converts the analog input to TTL levels. The time domain filter inhibits any false zero crossings that may be found on the outer edge of the disc surface. These false crossings are primarily caused by excessive third harmonics in the analog signal.

The differential receiver and 2-input Exclusive-OR gate form a bidirectional monostable multivibrator. The output of this device is delayed 50ns by the four Hex Schmitt triggers. This delay is used to clock the output of the zero cross detector into the D-type flip-flop. Any false clocks caused by a false zero crossing does not change the state of the flip-flop.

The last differential receiver and 2-input Exclusive-OR gate form a bidirectional monostable multivibrator that establishes the width of the data pulse output from the drive. The line driver converts the data pulse to differential RS-422 levels.

2.3.6 Write Operation

Block Diagram-

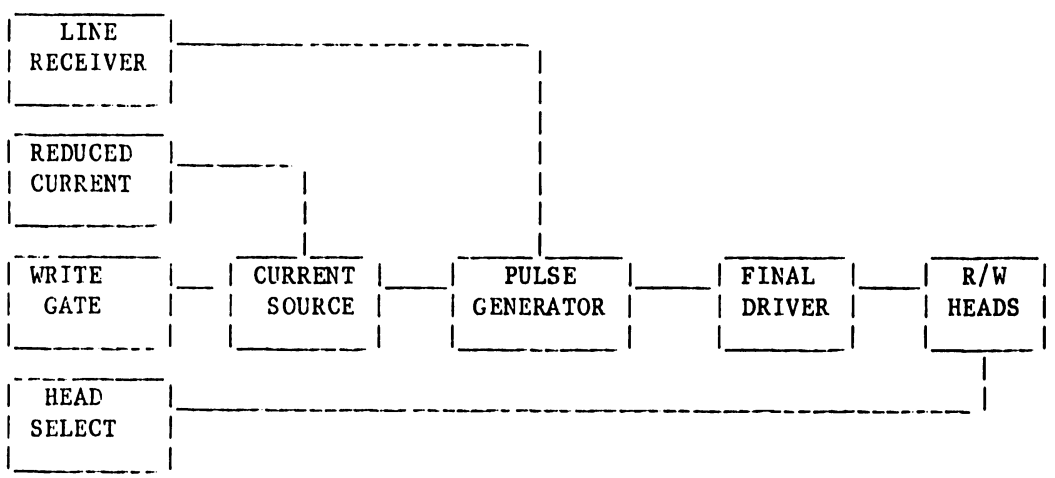

Functional Description-

In order to write, the following conditions must be true:

1) Write Fault inactive.
2) Drive Select active.
3) Drive Ready active.
4) Seek Complete active.
5) Write Gate active.

With Write Gate active and all the above conditions true, +12V is supplied to the write circuit current source (IC 4K) which provides a constant current to the pulsing circuit. When active, the Reduced Write Current will reduce the write current by approximately 10%, peak to peak.

When MFM write data is received by the line receiver, it clocks the D-type flip-flop causing the driver transistors to alternate write current between the windings of the selected head. The center tap of the selected head is at ground potential when Write Gate is active. When Write Gate goes false, the D-type flip-flop is both reset and preset. Both driver transistors are biased off and +12V is removed from the write circuit.

2.3.7 Fault Detection

Block Diagram-

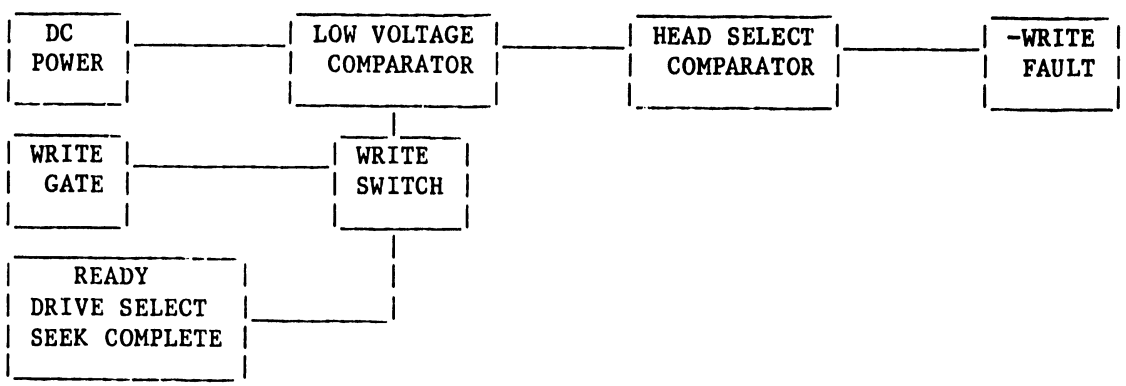

Functional Description-

Any combination of the following events will cause a Write Fault condition and will prevent the drive from writing:

1) Multiple heads selected.
2) DC voltages more than 20% low.
3) Write Gate active with no write current.
4) Write Gate inactive with write current.
5) Seek Complete inactive, with Write Gate active.

The Head Unsafe circuit monitors the head select output for the following conditions:

1) No head selected.
2) Multiple heads selected.
3) Head selected for read during write.
4) Head selected for write during read.

The Head Unsafe circuit constantly sums the head center tap voltage. If the voltage exceeds the upper or lower threshold established by the resistor divider, the circuit provides a Head Unsafe output. The upper and lower thresholds shift correspondingly when Write Gate is active. A capacitor delays this change to allow for the change from read to write. If any unsafe condition is sensed, the Write Fault line is activated and +12V is removed from the write circuit.

If the DC power degrades by more than 20%, the power unsafe detector circuit will deselect the head, activate Write Fault, turn off write current, and apply a reset to the microprocessor. After the reset is removed the processor counts 666 Index pulses then executes a recalibration sequence. Plus 5 volts dropping below 4 volts will force the +5 volt comparator to a high level. Plus 12 volts dropping below 10 volts will force the +12 volt comparator to a high level. When either comparator turns on, the resulting low level is gated through to the head select decoder and output to the drive interface as an active Write Fault signal. A low voltage fault condition will also turn off the write current source.

Write Gate and write current are continuously tested. If one is ever active when the other is not, a fault condition will occur. This signal is gated to the drive interface and head select decoder. It will also be gated to turn off the write current source. In addition to the three above listed fault conditions, Write Gate is compared with Drive Select, Seek Complete, and Ready. If an improper condition exists with any of these signals, write current will be shut off.

2.4 Test Point Description

2.4.1 Test Point Description PCB P/N 20096

Test Points 1 and 2 (Differential Read Filter):

Test Points 1 and 2 may be used to observe the differential read data. The typical amplitude of the signal resulting from adding the two channels is 300 millivolts. Test Point 8 should be used as ground to reduce noise.

Components of 1.25, 1.66, and 2.5 MHz should be observed. A full track record of high frequency data (ØØØØ or 1111) should resemble Figure 2.2.

Test Points 3 and 4 (Read Data):

Test Points 3 and 4 may be used to observe the Read Data from the operation of the Time Domain Filter. Trigger on Test Point 3 and monitor the delay at Test Point 4. Typically, the delay observed should be 50 nanoseconds. A full track record of high frequency data (ØØØØ or 1111) should resemble Figure 2.3.

Test Point 5 (Track Zero Sensor):

Test Point 5 may be used to monitor the Track Zero sensor. A high logic level is a valid Track Zero indication.

Test Point 6 (Index Sensor):

Test Point 6 may be used to monitor the Index sensor. A high logic level is a valid Index indication. Only the leading edge of the pulse may be considered valid. The typical signal at Test Point 6 should resemble Figure 2.4.

Test Point 6 may be used to adjust the spindle motor speed. Monitor Test Point 6 and adjust R3 on the Motor Control PCB (accessible through the side frame) for a period of 16.67 milliseconds, ±1%.

Test Points 7, 8, 9, and 10 (Convenience Ground):

For any of the above functions, use the ground test point that is in closest proximity to the active test point.

FIGURE 2.1

TEST POINT LAYOUT - PCB P/N 20096

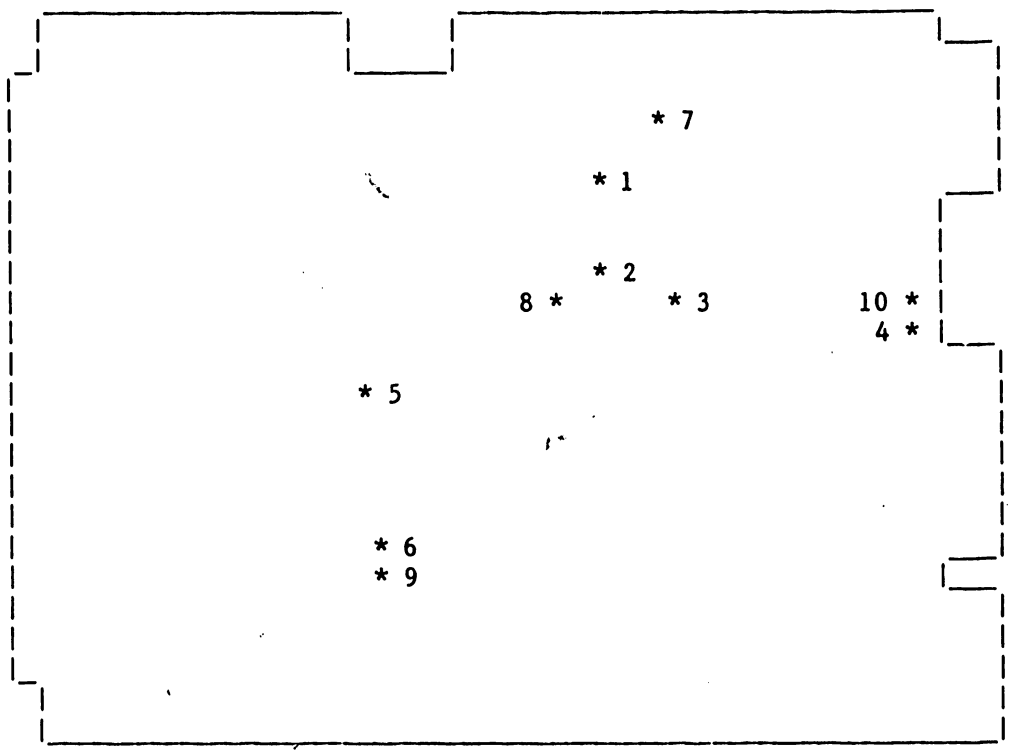

TEST POINT	DESCRIPTION
1&2	Differential Read Filter
3&4	Read Data
5	Track Zero Sensor
6	Index Sensor
7,8,9,10	Convenience Ground

TEST POINT TIMING - PCB P/N 20096

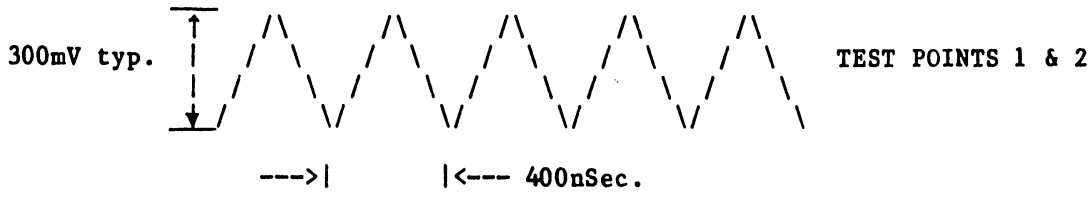

FIGURE 2.2
DIFFERENTIAL READ FILTER

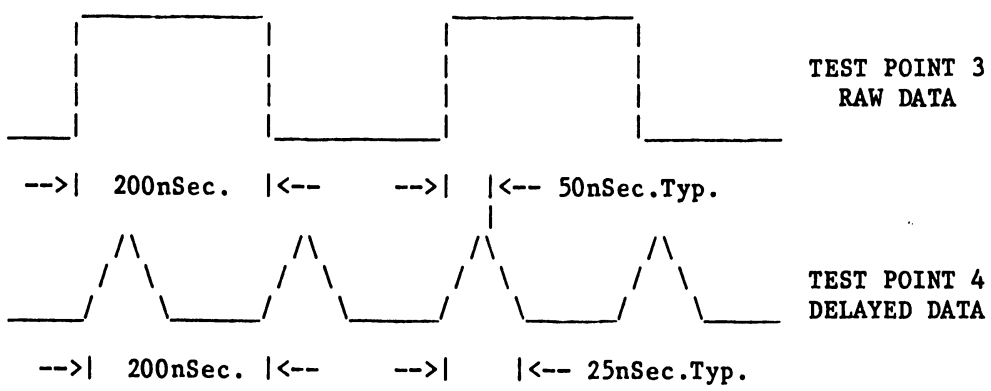

FIGURE 2.3
READ DATA

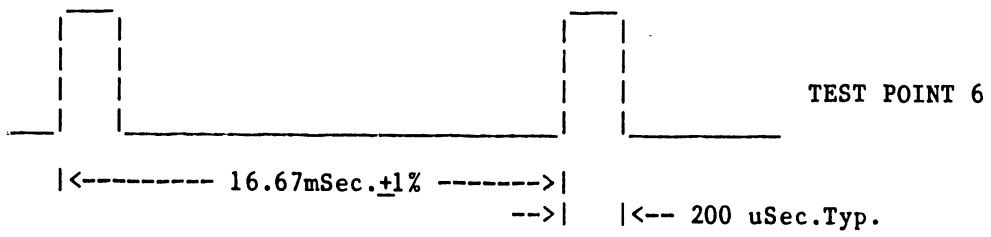

FIGURE 2.4
INDEX SENSOR

2.4.2 Test Point Description PCB P/N 20110

Test Point 3 (Track Zero Sensor):

Test Point 3 may be used to monitor the Track Zero sensor. A high logic level is a valid Track Zero indication.

Test Point 4 (Index Sensor):

Test Point 4 may be used to monitor the Index Sensor. A high logic level is a valid Index indication. Only the leading edge of the pulse may be considered valid. The typical signal at Test Point 4 should resemble Figure 2.8.

Test Point 5 (Seek Complete):

Test Point 5 may be used to monitor the Seek Complete line. A high logic level is a valid Seek Complete indication.

Test Point 6 (True Track Zero):

Test Point 6 may be used to monitor the Track Zero signal that is gated to the host controller. A high logic level is a valid Track Zero indication.

Test Points 7 & 8 (Differential Read Filter):

Test Points 7 & 8 may be used to observe the differential read data. The typical amplitude of the signal resulting from adding the two channels is 300 millivolts. Test Point 9 should be used as ground to reduce noise.

Components of 1.25, 1.66, and 2.5MHz should be observed. A full track record of high frequency data (0000 or 1111) should resemble Figure 2.6.

Test Points 11 & 13 (Read Data):

Test Points 11 & 13 may be used to observe the Read Data from the Time Domain Filter. Trigger on Test Point 11 and monitor the delay at Test Point 13. Typically, the delay observed should be 50 nanoseconds. A full track record of high frequency data (0000 or 1111) should resemble Figure 2.7.

Test Point 20 (5V Pullup):

Test Point 20 is a 5 volt pullup location. To use the pullup the line at J01 must be cut.

Test Points 9,10,12,14,15,16,21,22,23 (Convenience Grounds):

For any of the above functions, use the ground test point that is in the closest proximity to the active test point.

FIGURE 2.5

TEST POINT LAYOUT - PCB P/N 20110

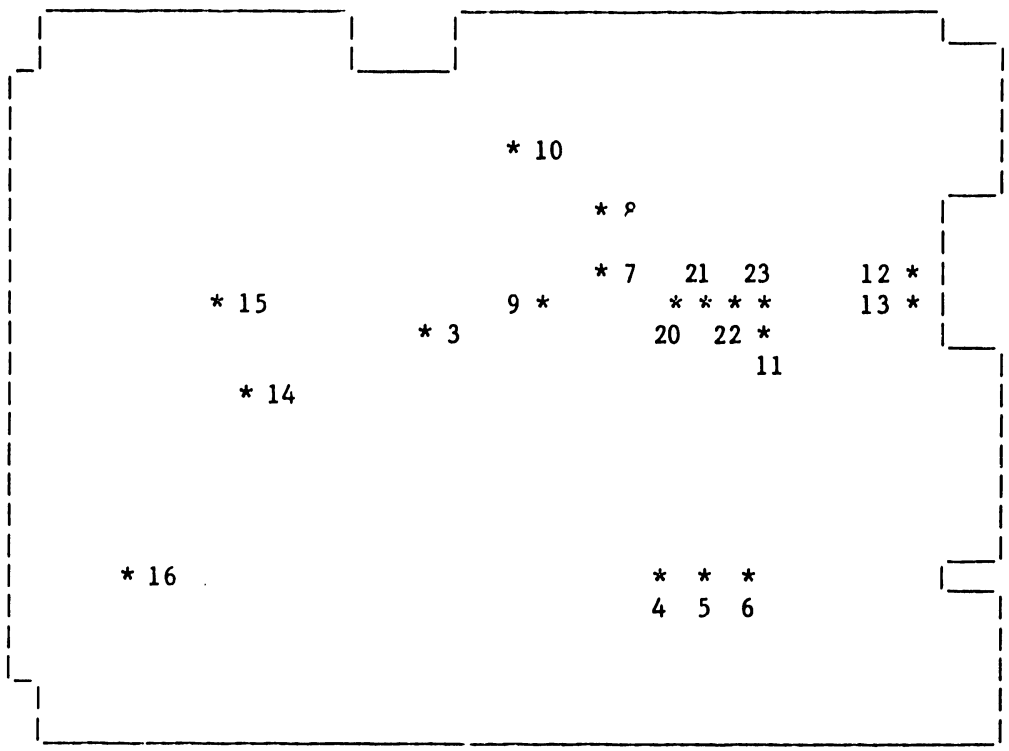

Test Point	Description
3	Track Zero Sensor
4	Index Sensor
5	Seek Complete
6	True Track Zero
7 & 8	Differential Read Filter
11 & 13	Read Data
20	5 Volt Pullup
9,10,12, 14,15,16, 21,22,23	Convenience Ground

TEST POINT TIMING PCB P/N 20110

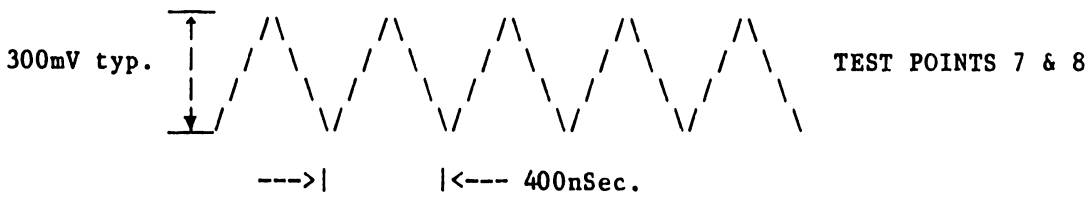

FIGURE 2.6
DIFFERENTIAL READ FILTER

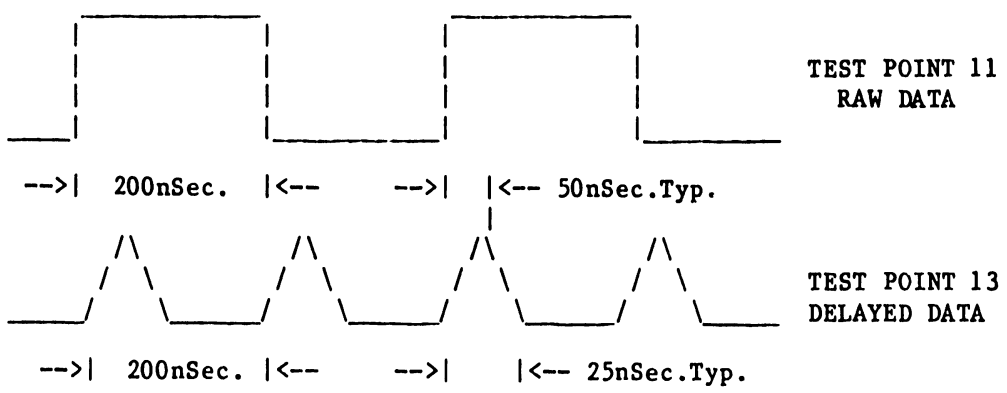

FIGURE 2.7
READ DATA

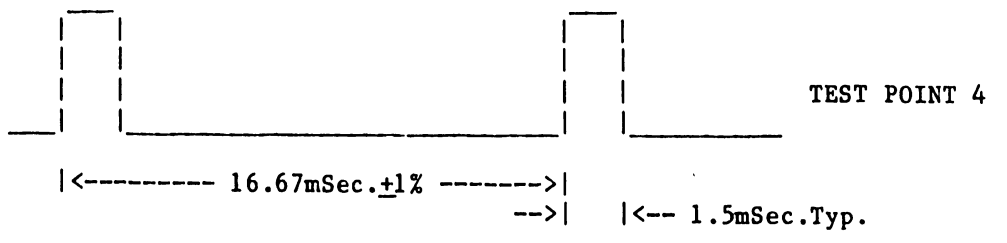

FIGURE 2.8
INDEX SENSOR

2.5 ST-4XX Schematics

2.5.1 Main Control PCB P/N 20096
2.5.2 Main Control PCB P/N 20110
2.5.3 Motor Control PCB P/N 20099
2.5.4 Motor Control PCB P/N 20136

THE SCHEMATICS, WHEN AVAILABLE, ARE ON THE LAST FICHE IN THIS SET.

SECTION 3 MAINTENANCE/ REPAIR

3.0 MAINTENANCE/REPAIR

3.1 Introduction

The Seagate Technology ST-4XX Microwinchester disc drive does not require preventive maintenance. Additionally, all units shipped are covered by a one year factory warranty. If field maintenance or repair is required, certain restrictions apply. Primarily, the environmentally sealed Head/Disc Assembly (HDA) must not be opened. Seagate Technology considers a drive to be out of warranty if the HDA has been tampered with. Any special tools or additional restictions will be covered under the appropriate sections.

This section of the ST-4XX Service Manual will attempt to cover adjustments and repair of the field serviceable portion of the disc drive. Any questions that are not covered in this document should be referred to the Technical Support department at Seagate Technology.

3.2 Removals/Adjustments

Note: Removal of any assembly not covered in this section is not possible without special clean room facilities and tools.

3.2.1 Main Control PCB

Tools Required: T-15 Torx Driver

1) Remove (4) 6-32 x 1/4" Main Control PCB mounting screws.
2) Disconnect P1 through P8, noting their positions.
3) Slide the Main Control PCB toward the rear of the drive and remove.
4) To reinstall, reverse the above procedure.

Note: It is recommended that replacement main control boards be powered up with the head cable, P5, disconnected to insure that a damaged replacement does not alter data on the disc. To determine if the board is good the Write Fault signal can be monitored at the junction of the inverter and R113. If a No Write Fault condition exists (high logic level at R113 junction) then the unit can be powered down and P5 connected. Avoid creasing the Printed Circuit Cable when removing P5.

Note: System applications may require that the nylon washer be removed to ground the main PCB.

3.2.2 Motor Control PCB

Tools Required: T-15 Torx Driver

1) Remove (4) 6-32 x 1/4" Main Control PCB mounting screws.
2) Disconnect P1 through P8, noting their positions.
3) Slide the Main Control PCB toward the rear of the drive and remove.
4) Disconnect Motor Control PCB P1 and P2, noting their orientation.
5) Remove (2) 6-32 x 1/4" Motor Control PCB mounting screws.
6) Remove the Motor Control PCB.
7) To reinstall, reverse the above procedure.

Note: Whenever the Motor Control PCB is replaced, or if any of its components are changed, the spindle speed must be adjusted.
Warm the drive up for approximately 5 minutes then connect a frequency counter to Test Point 6 (Index) and adjust the Motor Control PCB trimpot (accessible through the sideframe) for a period of 16.67 milliseconds $\pm$1%. The frequency counter used must average 100 samples per minute minimum.

Note: When replacing PCB 20099 with PCB 20136, remove the brake.

3.2.3 Spindle Brake (models with Motor Control PCB 20099)

Tools Required: T-15 Torx Driver
Loctite #242
10 Mil Shim (.010") (Flexible)

1) Remove (4) 6-32 x 1/4" Main Control PCB mounting screws.
2) Disconnect P1 through P8, noting their positions.
3) Slide the Main Control PCB toward the rear of the drive and remove.
4) Disconnect P2 at the Motor Control PCB and free the brake wires from the retaining clip.
5) Remove (1) 6-32 x 1" brake mounting screw, washer, and spacer.
6) Remove the brake solenoid.
7) To reinstall, apply Loctite to the first 3 threads of the brake mounting screw. Replace the brake solenoid, spacer, washer, and mounting screw but do not tighten.
8) Insert the flexible 10 mil shim between the brake pad and the spindle motor housing.
9) Move the brake toward the spindle motor housing until the solenoid spring assembly is compressed and a slight resistance is felt on the shim.
10) Tighten the 6-32 brake mounting screw and verify that the contour of the brake pad aligns with the spindle motor housing.
11) Route the brake solenoid wires through the retaining clip and connect P2 to the Motor Control PCB.
12) Reverse steps 1 through 3 to replace the Main Control PCB.

3.2.4 Index Sensor

Tools Required: T-15 Torx Driver
Loctite #242
30 Mil Shim (.030")

Note: This procedure may result in a loss of recorded data.

1) Remove (4) 6-32 x 1/4" Main Control PCB mounting screws.
2) Disconnect P1 through P8, noting their positions.
3) Slide the Main Control PCB toward the rear of the drive and remove.
4) Remove the connector from the front panel LED, noting the orientation of the connector.
5) Free the index sensor wires from the retaining clip.
6) Remove (2) 6-32 x 1/8" index sensor mounting screws and mounting clamp.
7) Remove the index sensor.
8) To reinstall, apply Loctite to the first three threads of the index sensor mounting screws. Replace the index sensor, mounting clamp, and mounting screws but do not tighten.

9) Rotate the spindle motor housing until the silver index tab aligns with the index sensor.
10) Using the 30 mil shim, adjust the gap between the index sensor and the index tab.
11) Tighten the 2 mounting clamp screws and verify that the gap is 30 mils.
12) Route the index sensor wires through the retaining clip and reconnect the LED.
13) Reverse steps 1 through 3 to replace the Main Control PCB.

3.2.5 Ground Spring

Tools Required: T-15 Torx Driver
Loctite #242

1) Remove (4) 6-32 x 1/4" Main Control PCB mounting screws.
2) Disconnect P1 through P8, noting their positions.
3) Slide the Main Control PCB toward the rear of the drive and remove.
4) Remove (1) 6-32 x 1/8" ground spring mounting screw.
5) Remove the ground spring.
6) To reinstall, apply Loctite to the first 3 threads of the ground spring mounting screw. Replace the ground spring.
7) Center the ground spring over the spindle motor contact ball and tighten.
8) Verify that the ground spring button and spindle motor ball are clean and making good contact.
9) Reverse steps 1 through 3 to replace the Main Control PCB.

3.2.6 Front Cover

Tools Required: T-15 Torx Driver

1) Remove (4) 6-32 x 1/4" Main Control PCB mounting screws.
2) Disconnect P1 through P8, noting their positions.
3) Slide the Main Control PCB toward the rear of the drive and remove.
4) Remove the connector from the front panel LED, noting the orientation of the connector.
5) Remove (2) 6-32 x 1/8" front panel mounting screws.
6) Remove the LED and grommet from the front panel, noting the orientation of the LED.
7) Remove the front panel.
8) To reinstall, reverse the above procedure.

Note: On models where the Head Disc Assembly employs the three point suspension system the front panel can be removed without removing the Main Control PCB. A water base hot melt glue may be used to secure the LED/grommet assembly.

3.2.7 Front Cover LED

Tools Required: T-15 Torx Driver

1) Remove (4) 6-32 x 1/4" Main Control PCB mounting screws.
2) Disconnect P1 through P8, noting their positions.
3) Slide the Main Control PCB toward the rear of the drive and remove.
4) Remove the connector from the front panel LED, noting the orientation of the connector (Black wire to single dot).
5) Remove the LED and grommet from the front panel, noting the orientation of the LED.
6) To reinstall, reverse the above procedure.

Note: On models where the Head Disc Assembly uses the three point suspension system, the front cover can be removed without removing the Main Control PCB. A water base hot melt glue may be used to secure the LED/grommet assembly.

3.2.8 Side Frames

Four point suspension.
Tools required: T-15 Torx Driver, 5/64" Hex Driver, Loctite 242

1) Remove (4) 6-32 x 1/4" Main Control PCB mounting screws.
2) Disconnect P1 through P8, noting their positions.
3) Slide the Main Control PCB toward the rear of the drive and remove.
4) Remove (2) 6-32 x 1/8" front cover mounting screws. It is not necessary to remove the LED connector.
5) Remove (4) 6-32 x 5/16" side frame mounting screws, washers, grommets, and spacers.
6) Remove the right and left side frames.
7) To reinstall, reverse the above procedure using Loctite on the first three threads of all 6-32 screws.

Three point suspension.
Tools Required: T-15 Torx Driver

1) Remove (4) 6-32 x 1/4" Main Control PCB mounting screws.
2) Disconnect P1 through P8, noting their positions.
3) Slide the Main Control PCB toward the rear of the drive and remove.
4) Remove (2) 6-32 x 1/8" front cover mounting screws. It is not necessary to remove the LED connector.
5) Remove (1) 6-32 x 1/4" ground strap mounting screw.
6) Remove (3) 6-32 x 5/16" box frame mounting screws and washers.
7) Remove the box frame.
8) To reinstall, reverse the above procedure.

3.2.9 Track Ø Sensor

Tools Required: T-15 Torx Driver, .050"Allen Wrench, Loctite

1) Remove (4) 6-32 x 1/4" Main Control PCB mounting screws.
2) Disconnect P1 through P8, noting the positions.
3) Slide the Main Control PCB toward the rear of the drive and remove.
4) Remove (2) 2-56 x 1/8" track Ø sensor mounting bracket retaining screws.
5) To reinstall, reverse the above procedure using Loctite on the first 3 threads of all screws.

Note: Proper positioning of the Track Ø sensor is important. The adjusting set screw should not be moved. It is recommended that this procedure be done at the factory.

Note: Models that have a single mounting screw in the center of the Track Ø assembly are not field servicable.

SECTION 4

ILLUSTRATED PARTS CATALOG

4.0 ILLUSTRATED PARTS CATALOG

4.1 Physical Locations

4.1.1 Drive Exploded View, 4 point suspension.
4.1.2 Drive Exploded View, 3 point suspension.
4.1.3 Connectors Exploded View

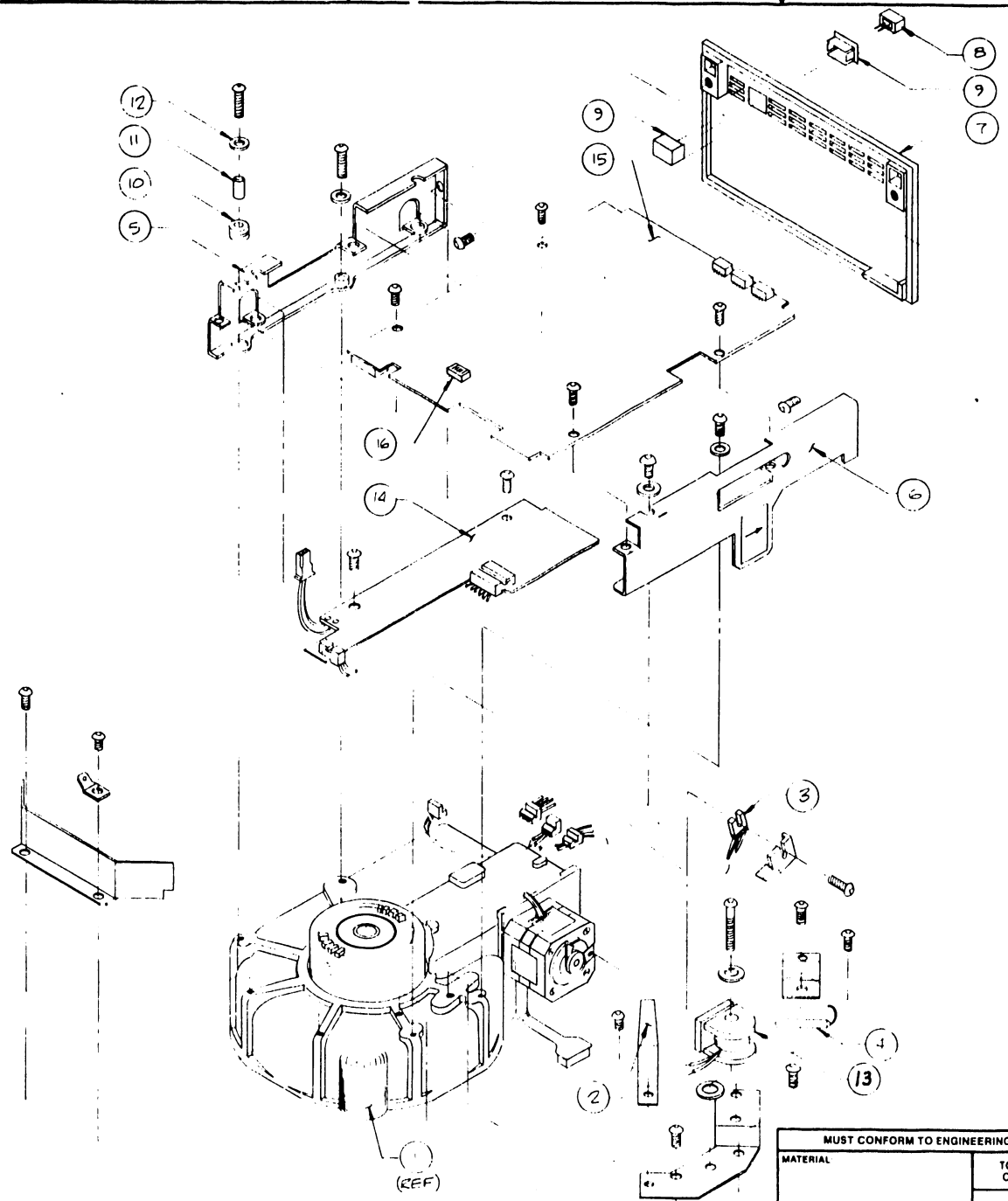

4 point suspension

ITEM	QTY.	DESCRIPTION	PART NO.	REMARKS
16	1	DIP SHUNT, 7 POS.	1825-007	
15	1	PWB ASSY., CONTROL	20040-001	
14	1	PWB ASSY, MTR CONTROL	20003-001	
13	1	ASSY, SPINDLE BRAKE	54026-001	
12	4	WASHER, FLAT #6	16527-006	
11	4	SPACER, SHOCK MNT.	58023-156	
10	4	SHOCK MOUNT	52025-001	
9	1	GROMMET, PANEL MNT	13025-001	
8	1	L.E.D.	10850-003	
7	1	COVER, FRONT	62018-001	
6	1	FRAME, RIGHT SIDE	64024-001	
5	1	FRAME, LEFT SIDE	64023-001	
4		ASSY., INDEX & LED CONN	54037-001	
3	1	TRK "0" SENSOR ASS'Y	2620-001	
2	1	GND SPRING ASS'Y	58061-001	
1	1	BASE CASTING	—	REFERENCE

MUST CONFORM TO ENGINEERING SPEC. 30130-001

MATERIAL

HARDNESS

SURFACE TREATMENT ES

TOLERANCE UNLESS OTHERWISE NOTED

LINEAR ± XX ± XXX

ANGULAR ±

CORNERS EDGES BROKEN OUTSIDE MAX INSIDE MAX

EC HISTORY

DATE	NO

SEAGATE TECHNOLOGY

TITLE DRIVE, EXPLODED VIEW

DETAIL Stryan 12-1-82 RELEASED FOR ASSEMBLY

DESIGN

APPRO

SHEET OF

C SCALE PART NO

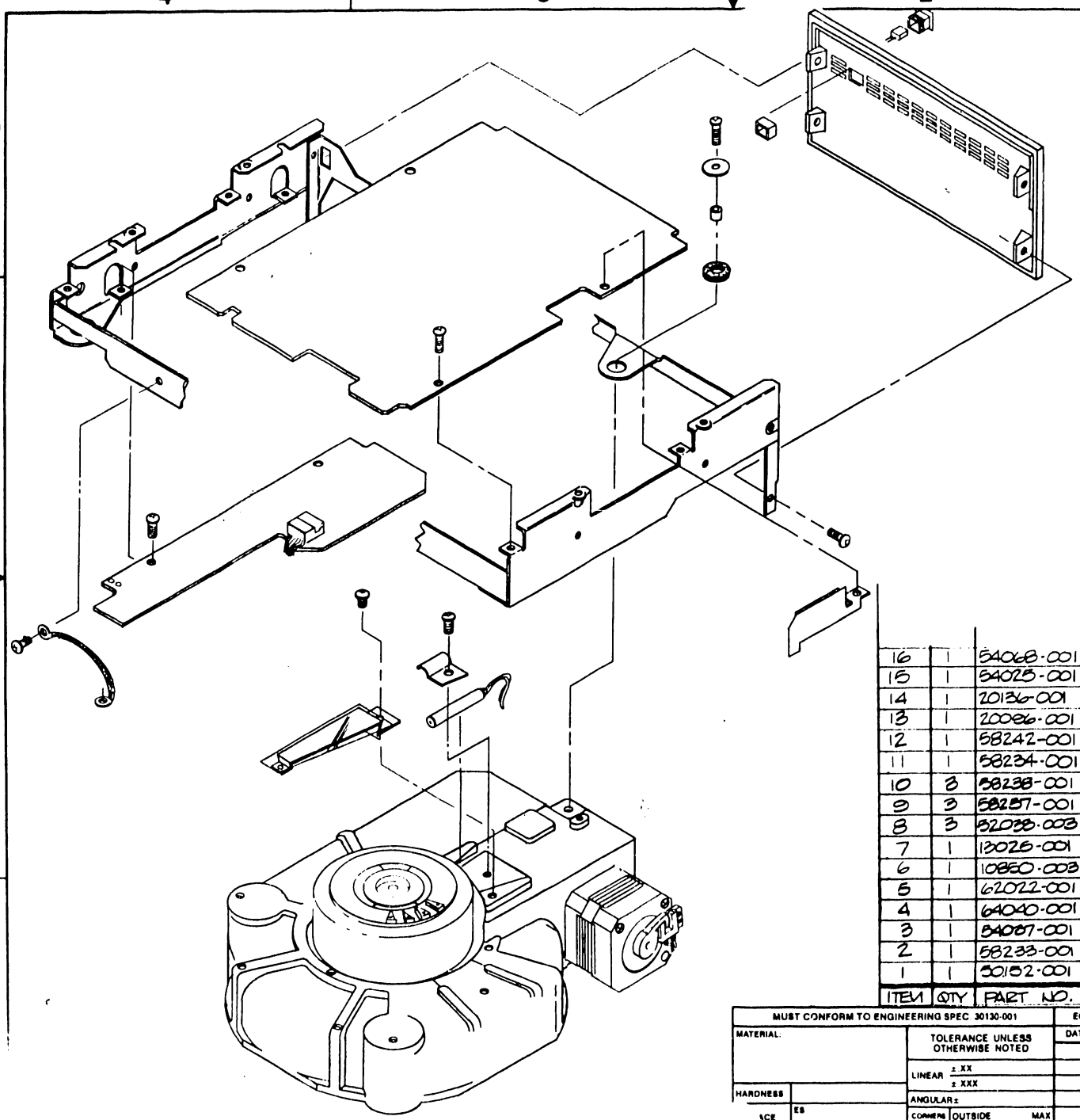

ITEM	QTY	PART NO.	DESCRIPTION	REMARKS
16	1	54068-001	MOTOR, STEPPER ASSY	
15	1	54025-001	MOTOR, D.C. BRUSHLESS	
14	1	20136-001	MOTOR CONTROL ASSY	
13	1	20086-001	CONTROL ASSY	
12	1	58242-001	PCC RETAINING BRKT ASSY	
11	1	58234-001	CLIP, INDEX	
10	8	58238-001	WASHER, SNUBBING	
9	3	58257-001	SPACER, VIBRATION ISOLATOR	
8	3	52038-003	VIBRATION ISOLATOR	
7	1	13026-001	GROMMET, PANEL MOUNT	
6	1	10860-003	LED	
5	1	62022-001	COVER, FRONT	
4	1	64040-001	FRAME WELDMENT	
3	1	54007-001	INDEX & LED CONN ASSY	
2	1	58233-001	GROUND SPRING ASSY	
1	1	30152-001	CASTING, BASE	REF

MUST CONFORM TO ENGINEERING SPEC 30130-001

MATERIAL:

TOLERANCE UNLESS OTHERWISE NOTED

LINEAR ± .XX ± .XXX

ANGULAR ±

HARDNESS

CORNERS EDGES BROKEN — OUTSIDE MAX — INSIDE MAX

ICE MENT ES

EC HISTORY

DATE	NO.

SEAGATE TECHNOLOGY

TITLE

DETAIL | DESIGN | APPRO

RELEASED FOR ASSEMBLY

SHEET OF

C

SCALE

PART NO

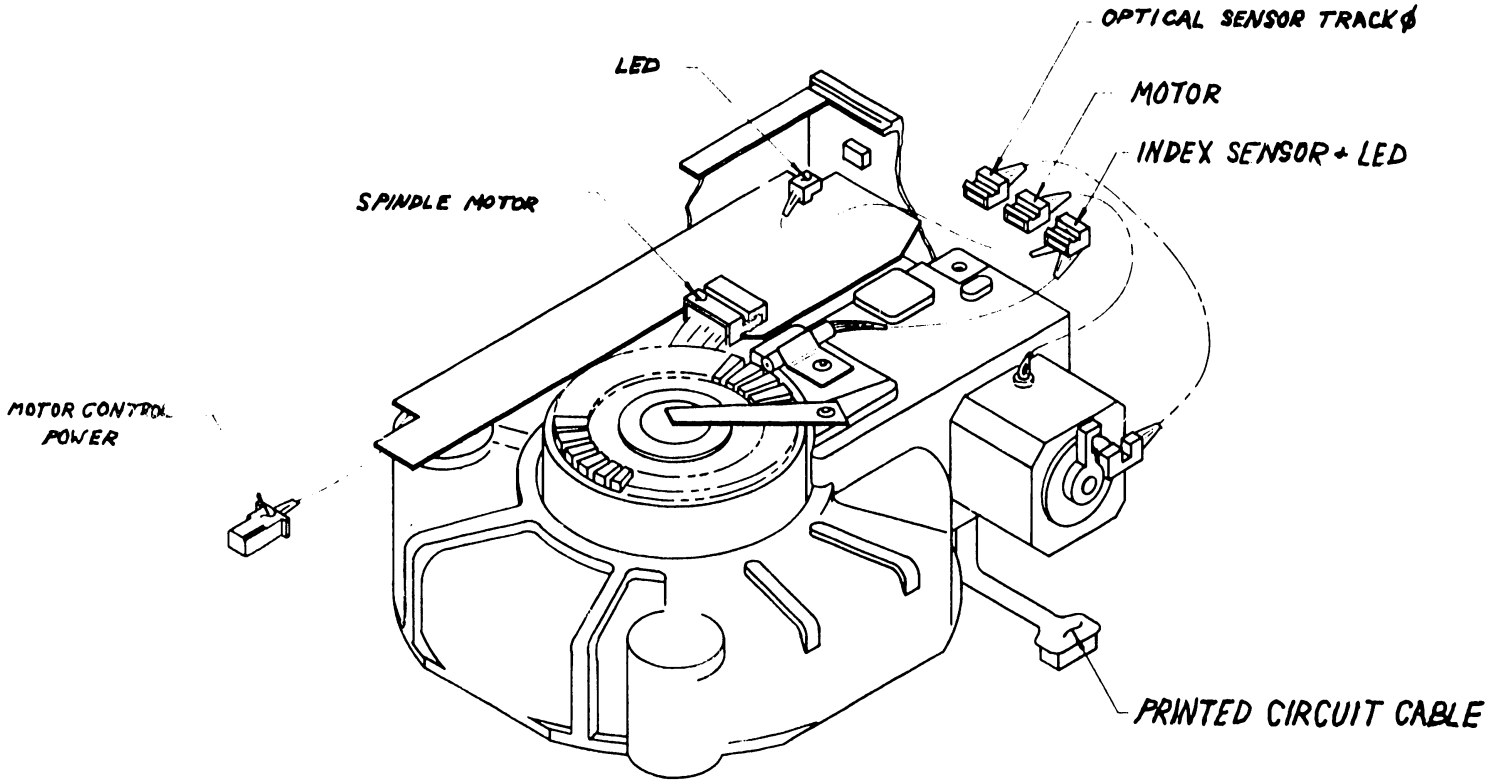

MUST CONFORM TO ENGINEERING SPEC. 30130-001				EC HISTORY		SEAGATE TECHNOLOGY	
MATERIAL:		TOLERANCE UNLESS OTHERWISE NOTED		DATE	NO.	TITLE	ST 412 CONNECTIONS
		LINEAR ±.XX / ±.XXX				DETAIL	11-3-82 RELEASED FOR ASSEMBLY
HARDNESS		ANGULAR±				DESIGN	
SURFACE TREATMENT	ES	CORNERS EDGES BROKEN	OUTSIDE MAX			APPRO	SHEET OF
			INSIDE MAX			B	SCALE / PART NO

4.2 Component Locations

4.2.1 Main Control PCB P/N 20096
4.2.2 Main Control PCB P/N 20110
4.2.3 Motor Control PCB P/N 20099
4.2.4 Motor Control PCB P/N 20136

SEAGATE TECHNOLOGY

MAIN CONTROL PCB 20096

SHEET OF

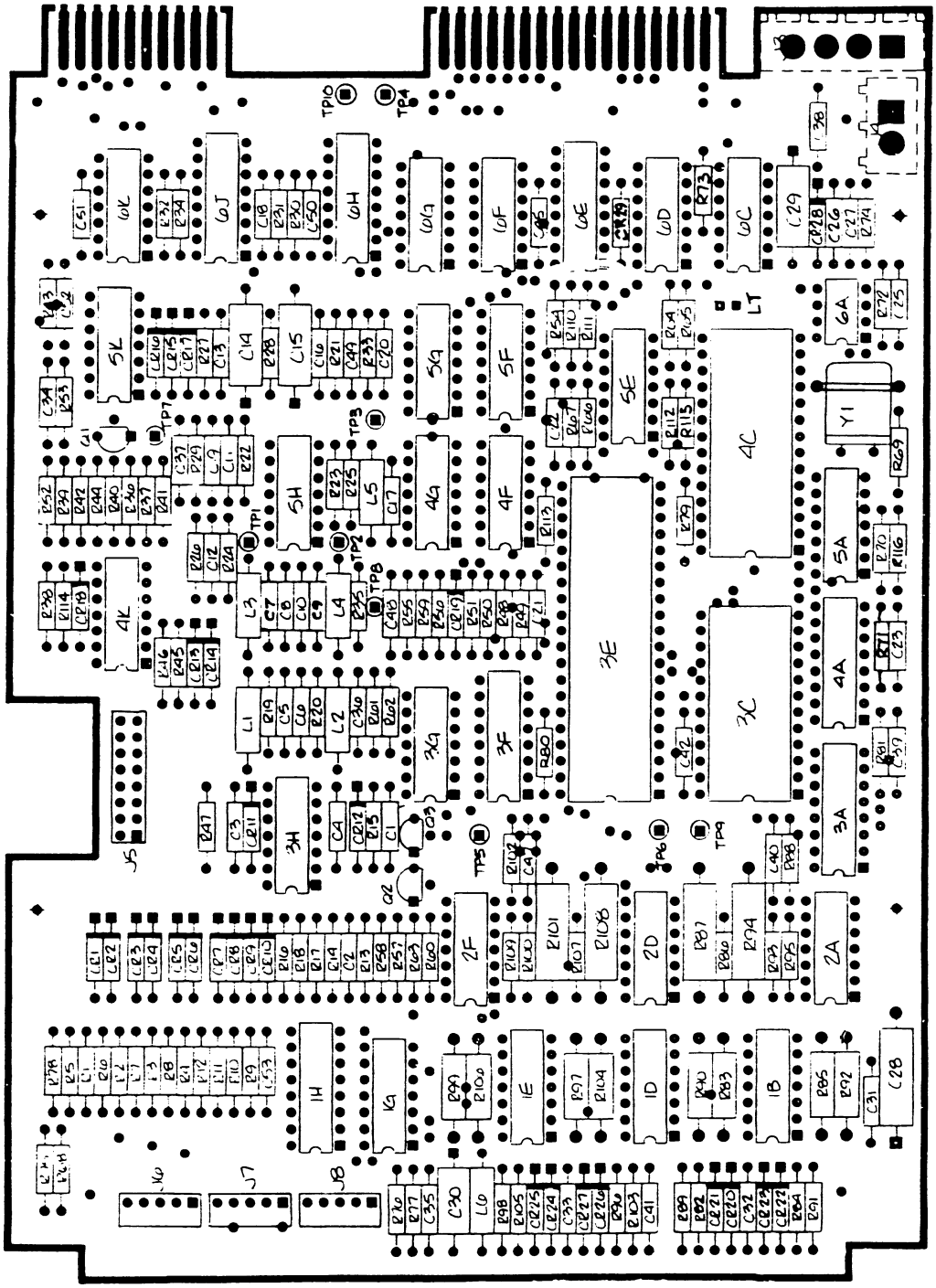

MAIN CONTROL PCB 20110

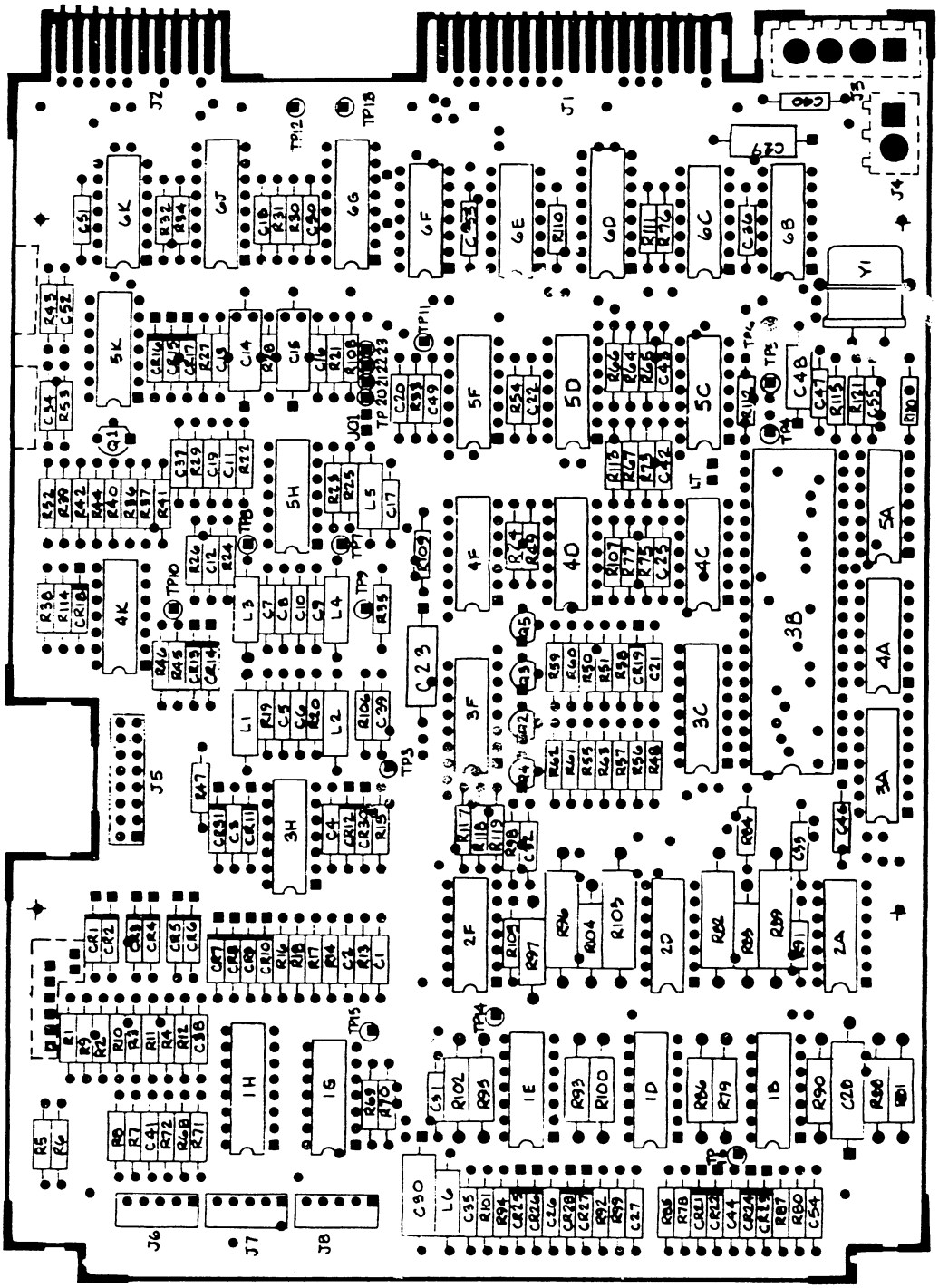

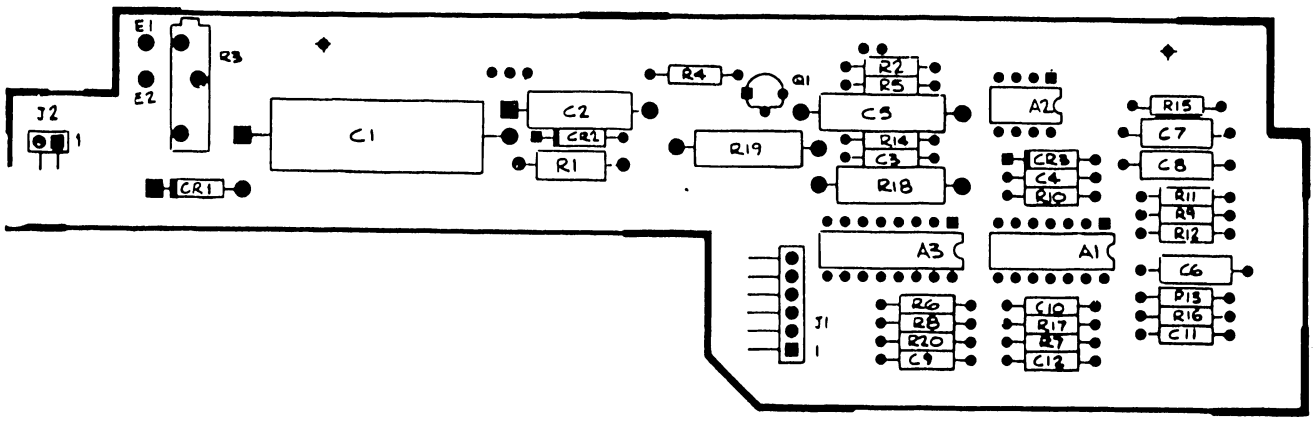
E1
E2
R3
J2
1
CR1
C1
C2
CR2
R1
R4
Q1
R19
R2
R5
C5
R14
C3
R18
A2
CR3
C4
R10
R15
C7
C8
R11
R9
R12
A3
A1
C6
J1
1
R6
R8
R20
C9
C10
R17
R7
C12
R13
R16
C11

4.2.4 MOTOR CONTROL PCB 20136

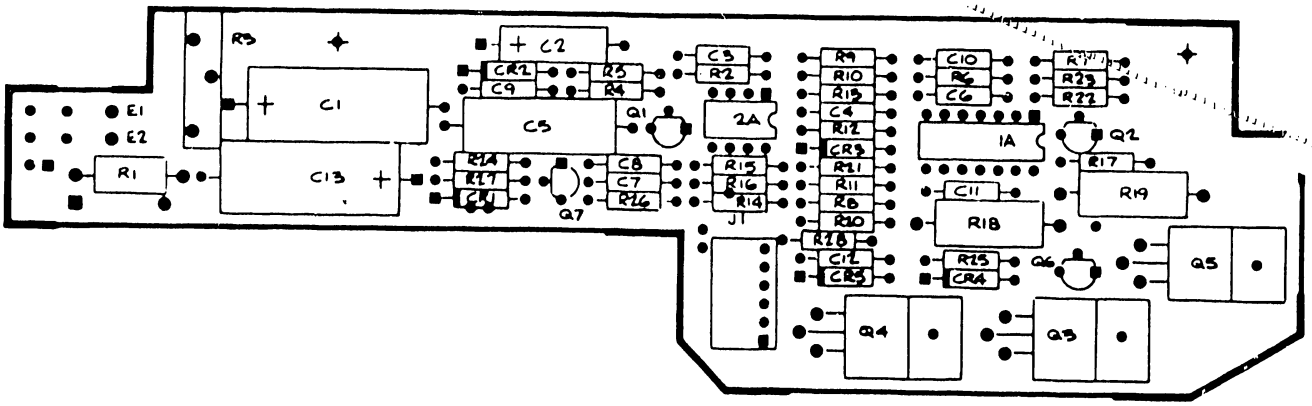

4.3 Parts Lists

4.3.1 Main Control PCB P/N 20096
4.3.2 Main Control PCB P/N 20110
4.3.3 Motor Control PCB P/N 20099
4.3.4 Motor Control PCB P/N 20136
4.2.5 Spare Parts List

4.3.1 Main Control PCB P/N 20096

Item No.	Quantity	Description	Location
1	3	I.C. 7406	4F,2A,2F
2	1	I.C. 7407	5K
3	4	I.C. 74LS14	4G,5E,6G,1G
4	1	I.C. 74LS14 (SIGNETICS ONLY)	5A
5	1	I.C. 7426	1D
6	2	I.C. 7438	6C,6D
7	1	I.C. 7445	1H
8	1	I.C. 74S74	6K
9	1	I.C. 74S86	5G
10	1	I.C. 74LS139	4A
11	2	I.C. 74LS173	3F,3A
12	1	I.C. 26LS31	6H
13	1	I.C. 26LS32	6J
14	1	I.C. 2732A-2	3C
15	1	I.C. 6503A	4C
16	1	I.C. 6532A	3E
17	1	I.C. LM339	3G
18	1	I.C. NE555	6A
19	1	I.C. NE592	5H
20	1	I.C. NE592 (LOW NOISE)	3H
21	1	I.C. 7408	5F
22	1	R/PACK 220/330 OHM	6F
23	1	SHUNT, 7 POS, AMP-435704-7	6E
24	1	RESISTOR, 1/8W, 1%, 8.2K	R116
25	2	RESISTOR, 1/8W, 1%, 7.68K	R49,51
26	3	RESISTOR, 1/8W, 1%, 1K	R48,50,57
27	2	RESISTOR, 1/8W, 1%, 1.5K	R16,17
28	2	RESISTOR, 1/8W, 1%, 162 OHM	R19,20
29	2	RESISTOR, 1/8W, 1%, 1/8 OHM	R22,23
30	1	RESISTOR, 1/8W, 1%, 4.87K	R35
31	1	RESISTOR, 1/8W, 1%, 61.9 OHM	R44
32	1	RESISTOR, 1/8W, 1%, 825	R58
33	4	RESISTOR, 1/4W, 5%, 560 OHM	R1-4
34	1	RESISTOR, 1/4W, 5%, 390 OHM	R42
35	1	RESISTOR, 1/4W, 5%, 47K	R77
36	2	RESISTOR, 1/4W, 5%, 47 OHM	R33,54
37	4	RESISTOR, 1/4W, 5%, 100 OHM	R25,34,40,41
38	7	RESISTOR, 1/4W, 5%, 150 OHM	R13,68,75,88,95, 102,109
39	2	RESISTOR, 1/4W, 5%, 750 OHM	R15,114
40	1	RESISTOR, 1/4W, 5%, 270 OHM	R14
41	2	RESISTOR, 1/4W, 5%, 1 MEG	R72,74
42	5	RESISTOR, 1/4W, 5%, 470 OHM	R27,28,45,46,56
43	2	RESISTOR, 1/4W, 5%, 620 OHM	R39,53
44	15	RESISTOR, 1/4W, 5%, 1K	R18,31,32,52,55, 63,66,67,110,111, 112,73,79-81,115

Item No.	Quantity	Description	Location
45	1	RESISTOR, 1/4W, 5%, 2K	R30
46	3	RESISTOR, 1/4W, 5%, 4.7K	R43,61,62
47	7	RESISTOR, 1/4W, 5%, 10K	R9-12,47,78,113
48	1	RESISTOR, 1/4W, 5%, 15K	R60
49	2	RESISTOR, 1/4W, 5%, 100K	R59,76
50	4	RESISTOR, 1/4W, 5%, 1.2K	R5,6,7,8
51	1	RESISTOR, 1/4W, 5%, 220 OHM	R64
52	2	RESISTOR, 1/4W, 5%, 680 OHM	R36,37
53	2	RESISTOR, 1/4W, 5%, 2.2K	R69,70
54	9	RESISTOR, 1/4W, 5%, 1.5K	R26,82,84,89,91,96, 98,103,105
55	5	RESISTOR, 1/4W, 5%, 330 OHM	R21,24,29,38,65
56	4	RESISTOR, 1/2W, 5%, 390 OHM	R86,93,100,107
57	27	DIODE, 1N4148	CR1-17,20-29
58	1	DIODE, ZENER, 4.3V, 5%, 1N5229B	CR19
59	1	DIODE, ZENER, 2.4V, 2%, 1N5221	CR18
60	3	TRANSISTOR, 2N3904	Q1,2,3
61	1	CAP, CERAMIC, .001UF, NPO, 5%	C23
62	1	CAP, CERAMIC, 33PF, NPO, 5%	C21
63	1	CAP, CERAMIC, 150PF, NPO, 5%	C17
64	1	CAP, CERAMIC, 100PF, NPO, 5%	C8
65	1	CAP, CERAMIC, 470PF, NPO, 5%	C20
66	1	CAP, CERAMIC, 330PF, NPO, 5%	C10
67	1	CAP, CERAMIC, .047UF, X7R, 10%	C4
68	1	CAP, CERAMIC, .068UF, X7R, 10%	C22
69	34	CAP, CERAMIC, .1UF, Z5U,+80,-20%	C1,3,5,6,11-13,16, 18,19,2,25-27,
70			31-42,45,47-53
71	4	CAP, TANTALUM, 4.7UF, 35V, 10%	C14,15,29,30
72	1	CAP, ELECTROLYTIC, 22UF, 16V	C28
73	1	TRANS ARRAY, TPQ2907	4K
74	2	TRANS ARRAY, Q2T3244 OR MPQ3467	1B,1E
75	1	TRANS ARRAY, Q2T3725 OR MPQ3725	2D
76	1	CRYSTAL, 2 MHZ, ±.1%, B200HC-18U	Y1
77	2	INDUCTOR, 2.2UH	L1,2
78	3	INDUCTOR, 10UH	L3,4,6
79	1	INDUCTOR, 3.3UH	L5
80	4	RESISTOR, 1/2W, 2%, 470 OHM	R83,90,97,104
81	4	RESISTOR, 1/2W, 2%, 510 OHM	R85,92,99,106
82	4	RESISTOR, 1W, 2%, 20 OHM	R87,94,101,108
83	1	HEADER, 16 PIN, AMP-86479-2	J5
84	3	HEADER, 5 PIN, AMP-640457-5	J6,7,8
85	1	HEADER, 2 PIN, AMP-350209-1	J4
86	1	HEADER, 4 PIN, AMP-350211-1	J3

4.3.2 Main Control PCB P/N 20110

Item No.	Quantity	Description	Location
1	3	I.C. 7406	4D,2A,4F
2	1	I.C. 7407	5K
3	4	I.C. 74LS14	4F,5C,1G,6F
4	1	I.D. 7426	1D
5	2	I.C. 7438	6B,6C
6	1	I.C. 7445	1H
7	1	I.C. 74S74	6K
8	2	I.C. 74LS74	4C,4A
9	2	I.C. 7408	5D,3A
10	1	I.C. 74S86	5F
11	1	I.C. 26LS31	6G
12	1	I.C. 26LS32	6J
13	1	I.C. 6500/1	3B
14	1	I.C. LM339	3F
15	1	I.C. 74C04	5A
16	1	I.C. NE592	5H
17	1	I.C. NE592(Low Noise)	3H
18	1	I.C. 74123	3C
19	1	R/PACK 220/330 OHM	6E
20	1	SHUNT, 7 POS, AMP-435704-7	6D
21	2	RESISTOR, 1/8W, 1%, 7.68K	R49,51
22	3	RESISTOR, 1/8W, 1%, 1K	R48,50,57
23	2	RESISTOR, 1/8W, 1%, 1.5K	R16,17
24	2	RESISTOR, 1/8W, 1%, 162 OHM	R19,20
25	2	RESISTOR, 1/8W, 1%, 178 OHM	R22,23
26	1	RESISTOR, 1/8W, 1%, 4.87K	R35
27	1	RESISTOR, 1/8W, 1%, 73.2 OHM	R44
28	1	RESISTOR, 1/8W, 1%, 825 OHM	R58
29	4	RESISTOR, 1/4W, 5%, 560 OHM	R1-4
30	1	RESISTOR, 1/4W, 5%, 390 OHM	R42
31	3	RESISTOR, 1/4W, 5%, 47K	R69,75,109
32	2	RESISTOR, 1/4W, 5%, 47 OHM	R33,54
33	4	RESISTOR, 1/4W, 5%, 100 OHM	R25,34,40,41
34	7	RESISTOR, 1/4W, 5%, 150 OHM	R13,68,71,84,91,98, 105
35	1	RESISTOR, 1/4W, 5%, 750 OHM	R114
36	2	RESISTOR, 1/4W, 5%, 270 OHM	R14,106
37			
38	6	RESISTOR, 1/4W, 5%, 470 OHM	R27,28,45,46,56,15
39	2	RESISTOR, 1/4W, 5%, 620 OHM	R39,53
40	20	RESISTOR, 1/4W, 5%, 1K	R18,31,32,52,55, 63,66,67,110,111, 112,73,115,118,119, 113,77,107,108,76
41	1	RESISTOR, 1/4W, 5%, 2K	R30
42	3	RESISTOR, 1/4W, 5%, 4.7K	R43,61,62

Item No.	Quantity	Description	Location
43	5	RESISTOR, 1/4W, 5%, 10K	R9-12,47,72
44	1	RESISTOR, 1/4W, 5%, 15K	R60
45	2	RESISTOR, 1/4W, 5%, 100K	R59,70
46	4	RESISTOR, 1/4W, 5%, 1.2K	R5,6,7,8
47	1	RESISTOR, 1/4W, 5%, 220 OHM	R64
48	2	RESISTOR, 1/4W, 5%, 680 OHM	R36,37
49	2	RESISTOR, 1/4W, 5%, 2.2K	R74,117
50	9	RESISTOR, 1/4W, 5%, 1.5K	R26,78,80,85,87,92, 94,99,101
51	2	RESISTOR, 1/4W, 5%, 3.3K	R120,121
52	5	RESISTOR, 1/4W, 5%, 330 OHM	R21,24,29,38,65
53	4	RESISTOR, 1/2W, 5%, 390 OHM	R83,90,97,104
54	15	DIODE, 1N4148	CR9-12,15-17,21-28
55	1	DIODE, ZENER, 4.3V, 5%, 1N5229B	CR19
56	1	DIODE, ZENER, 2.4V, 2%, 1N5221	CR18
57	12	DIODE, UNITRODE NDP 767	CR5-8,13,14,30,31
58	3	TRANSISTOR, 2N3904	Q1,2,3,5
59	1	TRANSISTOR, 2N3906	Q4
60	1	CAP, CERAMIC, 33PF, NPO, 5%	C21
61	1	CAP, CERAMIC, 150PF, NPO, 5%	C17
62	1	CAP, CERAMIC, 100PF, NPO, 5%	C8
63	2	CAP, CERAMIC, 470PF, NPO, 5%	C20,55
64	1	CAP, CERAMIC, 330PF, NPO, 5%	C10
65	2	CAP, CERAMIC, .047UF, X7R, 10%	C4,23
66	1	CAP, CERAMIC, .068UF, X7R, 10%	C22
67	35	CAP, CERAMIC, .1UF, Z5U,+80,-20%	C1,3,5,6,11-13,16, 18,19,25-28,31-33, 49-52,40-44,35-38, 46,47,54
68	6	CAP, TANTALUM, 4.7UF, 35V, 10%	C14,15,29,30,23,48
69	1	CAP, ELECTROLYTIC, 22UF, 16V	C28
70	1	TRANS ARRAY, TPQ2907	4K
78	2	TRANS ARRAY, Q2T3244 OR MPQ3467	1B,1E
79	1	TRANS ARRAY, Q2T3725 OR MPQ3725	2D
80	1	CRYSTAL, 2 MHZ, ±.1%, B200HC-18U	Y1
81	2	INDUCTOR, 2.2UH	L1,2
82	3	INDUCTOR, 10UH	L3,4,6
83	1	INDUCTOR, 3.3UH	L5
84	4	RESISTOR, 1/2W, 2%, 470 OHM	R79,86,93,100
85	4	RESISTOR, 1/2W, 2%, 510 OHM	R81,88,95,102
86	4	RESISTOR, 1W, 2%, 20 OHM	R82,89,96,103
87	1	HEADER, 16 PIN, AMP-86479-2	J5
88	3	HEADER, 5 PIN, AMP-640457-5	J6,7,8
89	1	HEADER, 2 PIN, AMP-350209-1	J10
90	1	HEADER, 4 PIN, AMP-350211-1	J3

4.3.2 Motor Control PCB P/N 20099

Item No.	Quantity	Description	Location
1	1	TRANS ARRAY, TPQ2907 OR TPQ3906	A1
2	1	I.C. LM358	A2
3	1	I.C. ULN2074B OR ULN2075	A3
4	1	CAP, POLYCARB, .1uf, 50V, 10%	C5
5	1	CAP, ALUM. ELECT., 150uf, 25V	C1
6	1	CAP, ALUM. ELECT., 22uf, 16V	C2
7	2	CAP, CERAMIC, .0047uf, X7R	C3,4
8	2	CAP, CERAMIC, .047uf, X7R	C6,7
9	1	CAP, CERAMIC, .068uf, X7R	C8
10	1	CAP, CERAMIC, .001uf, X7R	C10
11	3	CAP, CERAMIC, .1uf, Z5U	C9,11,12
12	1	DIODE, 1N4005	CR1
13	1	DIODE, ZENER, 6.2V, 1N5234	CR2
14	1	DIODE, 1N4148	CR3
15	1	TRANSISTOR, 2N3904	Q1
16	3	RESISTOR, 1/4W, 5%, 10K	R2,11,5
17	2	RESISTOR, 1/4W, 5%, 47K	R4,9
18	1	RESISTOR, 1/4W, 5%, 1K	R8
19	1	RESISTOR, 1/4W, 5%, 470 OHM	R6
20	2	RESISTOR, 1/4W, 5%, 1.5K	R7,16
21	2	RESISTOR, 1/4W, 5%, 20K	R10,14
22	1	RESISTOR, 1/4W, 5%, 510K	R12
23	1	RESISTOR, 1/4W, 5%, 100K	R13
24	1	RESISTOR, 1/4W, 5%, 1.2 MEG	R15
25	2	RESISTOR, 1/4W, 5%, 4.7K	R17,20
26	1	RESISTOR, 1/2W, 2%, 130 OHM	R1
27	2	RESISTOR, 2W, 5%, .20 OHM	R18,19
28	1	POT, 3/4W, 10%, 50K	R3

4.3.3 Motor Control PCB P/N 20136

Item No.	Quantity	Description	Location
1	1	TRANS ARRAY, TPQ2907 OR TPQ3906	A1
2	1	I.C. LM358	A2
3	1	CAP, POLYCARB, .1uf, 50V, 10%	C5
4	2	CAP, ALUM. ELECT., 150uf, 25V	C1,13
5	1	CAP, ALUM. ELECT., 22uf, 16V	C2
6	2	CAP, CERAMIC, .0047uf, X7R	C3,4
7	2	CAP, CERAMIC, .047uf, X7R	C6,7
8	1	CAP, CERAMIC, .068uf, X7R	C8
9	1	CAP, CERAMIC, .001uf, X7R	C10
10	3	CAP, CERAMIC, .1uf, Z5U	C9,11,12
11	3	DIODE, 1N4005	CR1,4,5
12	1	DIODE, ZENER, 6.2V, 1N5234	CR2
13	1	DIODE, 1N4148	CR3
14	3	TRANSISTOR, 2N3904	Q1,2,6
15	1	TRANSISTOR, 2N3906	Q7
16	3	TRANSISTOR, TIP120	Q3,4,5
17	1	RESISTOR, 1/4W, 5%, 220K	R27
18	3	RESISTOR, 1/4W, 5%, 10K	R2,11,5
19	2	RESISTOR, 1/4W, 5%, 47K	R4,9
20	2	RESISTOR, 1/4W, 5%, 1K	R8,21
21	1	RESISTOR, 1/4W, 5%, 470 OHM	R6
22	2	RESISTOR, 1/4W, 5%, 1.5K	R7,16
23	3	RESISTOR, 1/4W, 5%, 20K	R10,14,26
24	2	RESISTOR, 1/4W, 5%, 510K	R12,28
25	2	RESISTOR, 1/4W, 5%, 100K	R13,24
26	1	RESISTOR, 1/4W, 5%, 1.2 MEG	R15
27	2	RESISTOR, 1/4W, 5%, 4.7K	R17,20
28	1	RESISTOR, 1/8W, 1%, 33.2 OHM	R22
29	1	RESISTOR, 1/8W, 1%, 68.1 OHM	R23
30	1	RESISTOR, 1/2W, 2%, 130 OHM	R1
31	2	RESISTOR, 2W, 5%, .20 OHM	R18,19
32	1	RESISTOR, 1/4W, 5%, 4.3K	R29
33	1	POT, 3/4W, 10%, 50K	R3

4.3.4 Spare Parts List

Item No.	Qty/Drive	Description	S/T Part No.
1	1	Main Control PCB Assembly	20096-001 (406)-002
2	1	Main Control PCB Assembly	20110-001 (406)-002
3	1	Motor Control PCB Assembly	20099-001
4	1	Motor Control PCB Assembly	20136-001
5	1	Spindle Brake Assembly	54026-001
6	1	Index, LED Assembly	54037-001
7	1	Ground Spring Assembly	58061-001
8	4	Shock Mount	52025-001
9	4	Shock Mount Spacer	58023-156
10	4	Shock Mount Washer	16527-006
11	1	Track Ø Sensor (Optical Inter.)	12620-001
12	1	Box Frame	58169-001
13	1	Front Cover	62020-001
14	1	Front Cover LED	10850-003
15	1	Front Cover LED Grommet	13025-001
16	1	DIP Shunt, 7 Position	11825-007

SCHE-
MATICS

2.5 ST-4XX Schematics

2.5.1 Main Control PCB P/N 20096
2.5.2 Main Control PCB P/N 20110
2.5.3 Motor Control PCB P/N 20099
2.5.4 Motor Control PCB P/N 20136

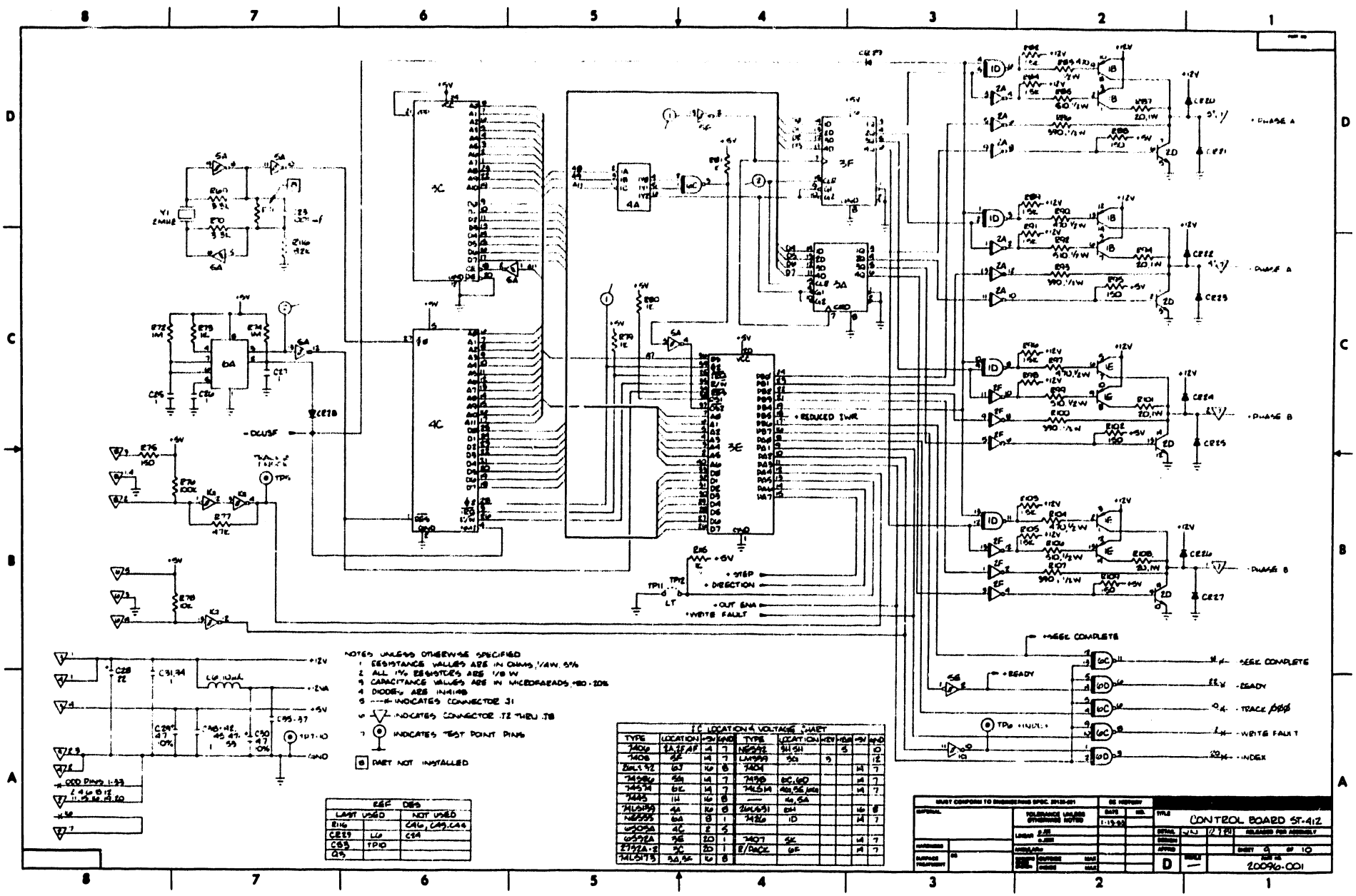

NOTES UNLESS OTHERWISE SPECIFIED
1. RESISTANCE VALUES ARE IN OHMS, 1/4W, 5%
2. ALL 1% RESISTORS ARE 1/8 W
3. CAPACITANCE VALUES ARE IN MICROFARADS, +80-20%
4. DIODES ARE 1N4148
5. ---#- INDICATES CONNECTOR J1
6. -▽- INDICATES CONNECTOR J2 THRU J8
7. ⊙ INDICATES TEST POINT PINS
8. PART NOT INSTALLED

REF DES		
LAST USED		NOT USED
R116		C46, C43, C44
CR29	L6	C24
C83	TP10	
Q3		

IC LOCATION & VOLTAGE CHART										
TYPE	LOCATION	+5V	GND	TYPE	LOCATION	+12V	+5V	+5V	GND
7406	2A, 2F, 4F	14	7	NE592	3H, 5H		5		10
7408	5F	14	7	LM399	5G	9			12
26LS32	6J	16	8	7404				14	7
74S86	5G	14	7	7498	6C, 6D			14	7
74S74	6K	14	7	74LS14	4G, 5E, 6G			14	7
7445	1H	16	8	—	4G, 5A				
74LS139	4A	16	8	26LS31	6H			16	8
NE555	6A	8	1	7426	1D			14	7
6S05A	4C	2	5						
6S92A	3E	20	1	7407	5K			14	7
2732A-2	3C	20	1	E/PACK	6F			14	7
74LS173	3A, 5F	16	8						

MUST CONFORM TO ENGINEERING SPEC. 20120-001

TOLERANCE UNLESS OTHERWISE NOTED

DATE 1-13-83

TITLE CONTROL BOARD ST-412

SHEET 9 OF 10

D

20096-001

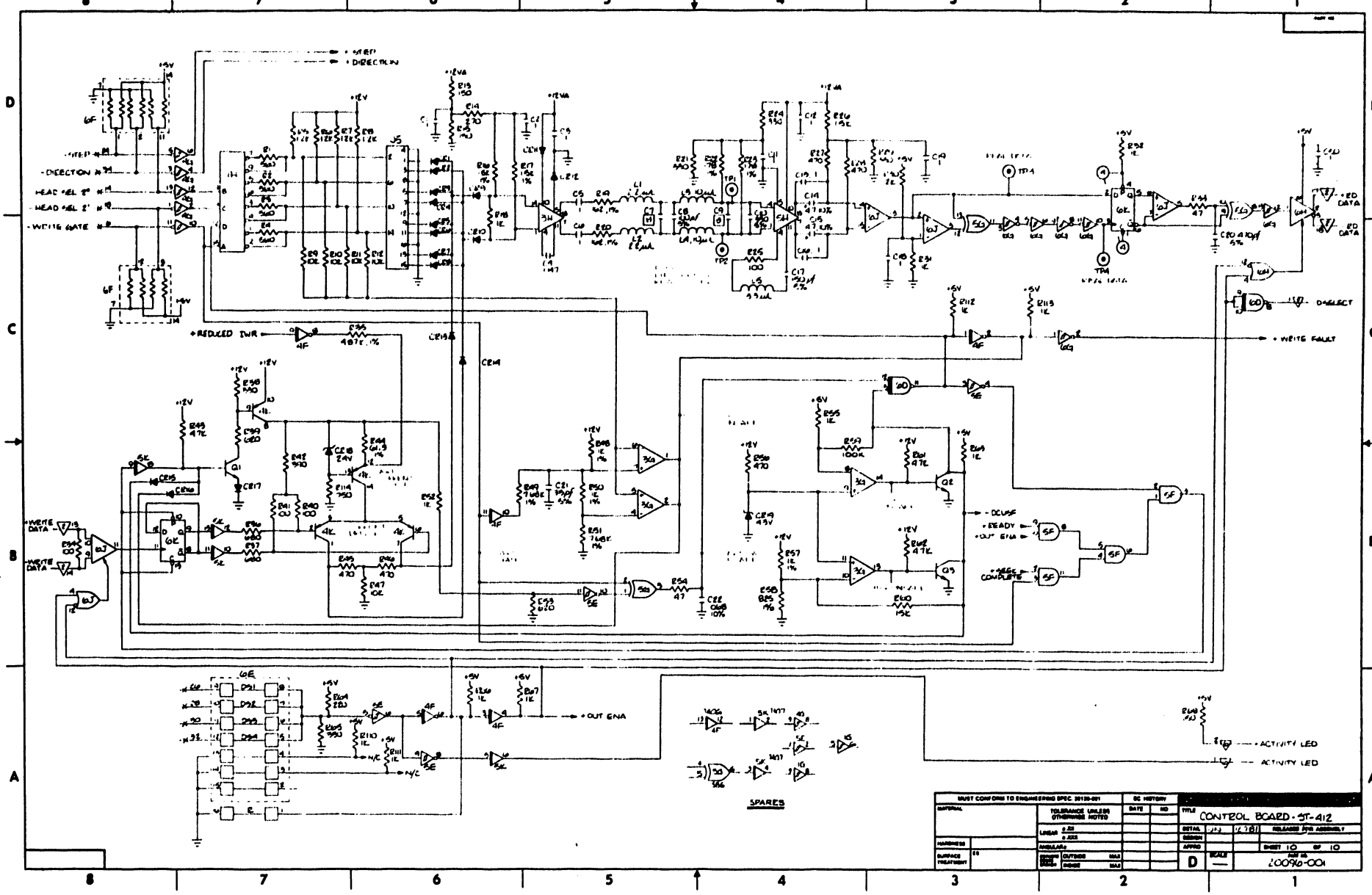

+STEP
+DIRECTION
-STEP
-DIRECTION
HEAD SEL 2°
HEAD SEL 2'
-WRITE GATE
+REDUCED IWR
+WRITE DATA
-WRITE DATA
+OUT ENA
+WRITE FAULT
-DCUSF
+READY
+OUT ENA
+SEEK COMPLETE
+RD DATA
-RD DATA
-DSELECT
+ACTIVITY LED
-ACTIVITY LED
SPARES
MUST CONFORM TO ENGINEERING SPEC. 20130-001
TOLERANCE UNLESS OTHERWISE NOTED
DC HISTORY
DATE
NO
TITLE
CONTROL BOARD - ST-412
DETAIL
DESIGN
APPRO
RELEASED FOR ASSEMBLY
SHEET 10 OF 10
D
SCALE
20096-001

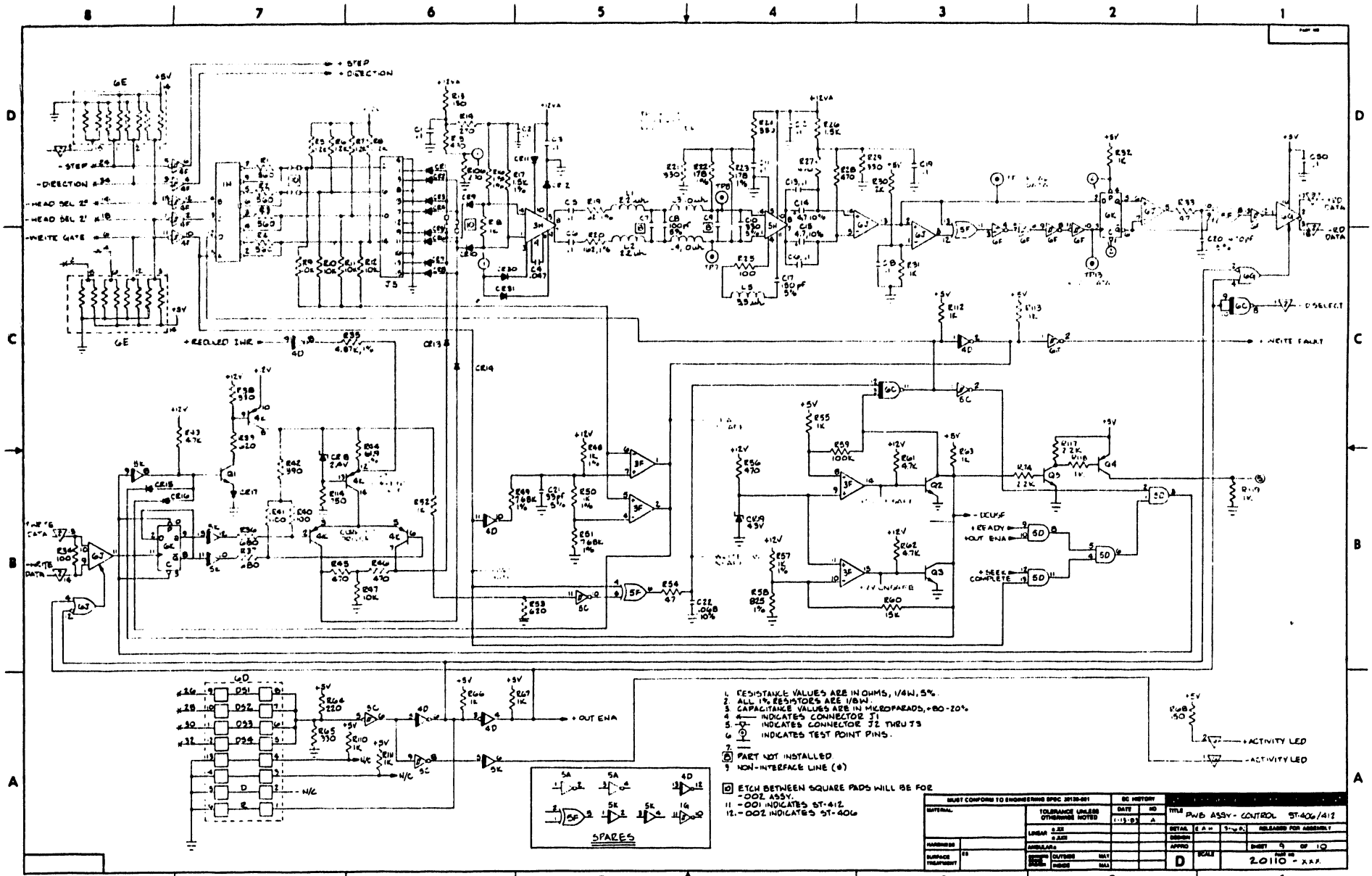

1. RESISTANCE VALUES ARE IN OHMS, 1/4W, 5%.
2. ALL 1% RESISTORS ARE 1/8W.
3. CAPACITANCE VALUES ARE IN MICROFARADS, +80-20%.
4. ← INDICATES CONNECTOR J1
5. -▽- INDICATES CONNECTOR J2 THRU J3
6. ⊙ INDICATES TEST POINT PINS.
7. —
8. PART NOT INSTALLED.
9. NON-INTERFACE LINE (#)
10. ETCH BETWEEN SQUARE PADS WILL BE FOR -002 ASSY.
11. -001 INDICATES ST-412
12. -002 INDICATES ST-406

MUST CONFORM TO ENGINEERING SPEC 20130-001		EC HISTORY	
MATERIAL	TOLERANCE UNLESS OTHERWISE NOTED	DATE 1-13-83	NO A
	LINEAR ±.XX ±.XXX		
HARDNESS	ANGULAR ±		
SURFACE TREATMENT		CUTSIDE MAX / INSIDE MAX	

TITLE PWB ASSY - CONTROL ST-406/412

DETAIL E A H 3-6-83 RELEASED FOR ASSEMBLY

DESIGN

APPRO

SHEET 9 OF 10

D SCALE PART NO 20110 - XXX

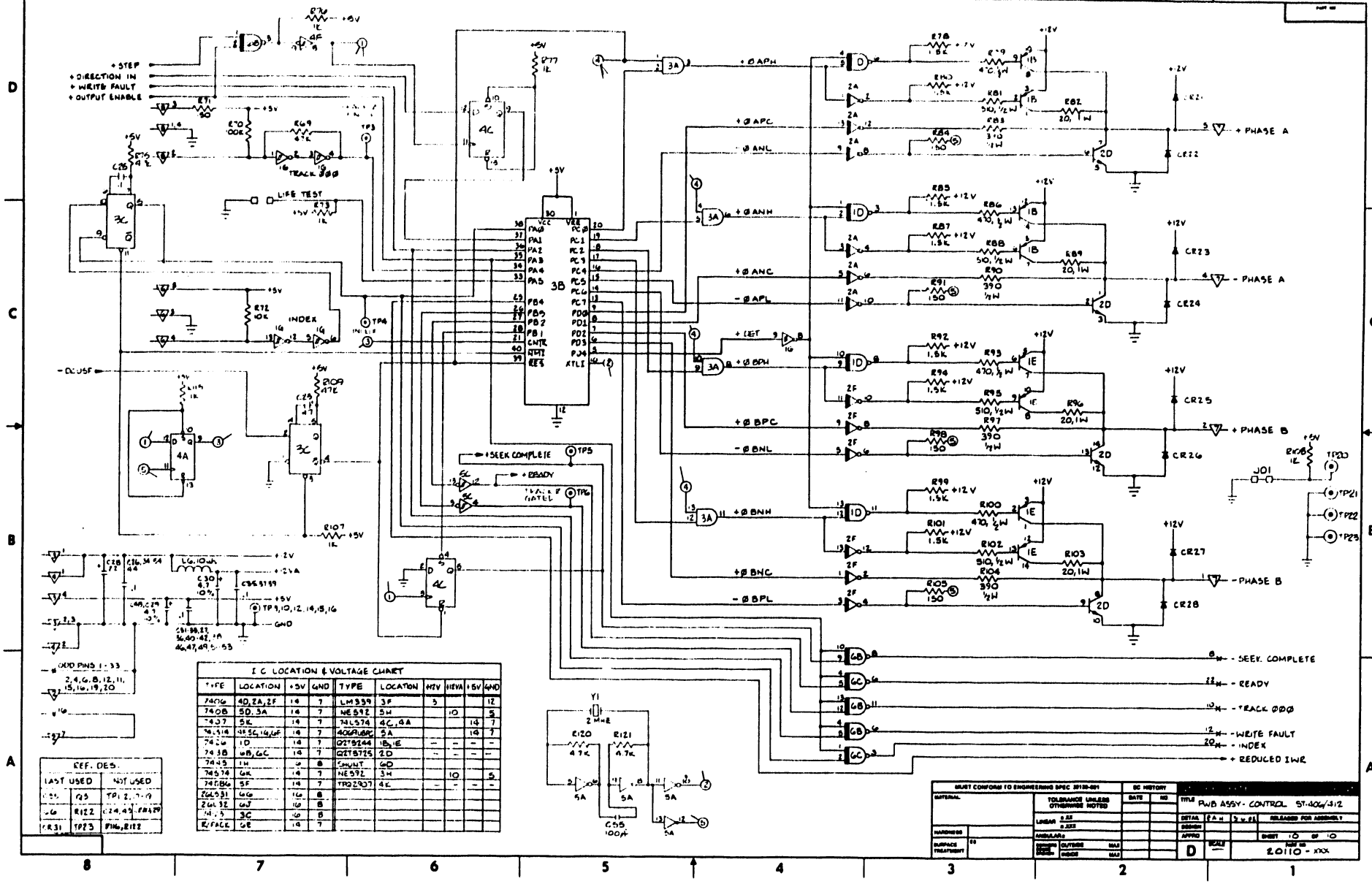

REF. DES.		
LAST USED		NOT USED
C55	Q5	TP1, 2, 7-19
C6	R122	C24, 45, R8, 29
CR31	TP23	R116, R122

I C LOCATION & VOLTAGE CHART

TYPE	LOCATION	+5V	GND	TYPE	LOCATION	+12V	+12VA	+5V	GND
7406	4D, 2A, 2F	14	7	LM339	3F	3			12
7408	5D, 3A	14	7	NE592	5H		10		5
7407	5K	14	7	74LS74	4C, 4A			14	7
74LS14	4F, 5C, 1G, 6F	14	7	4069UBPC	5A			14	7
7426	1D	14	7	Q2TS244	1B, 1E	–	–	–	–
7438	6B, 6C	14	7	Q2TS725	2D	–	–	–	–
7445	1H	16	8	SHUNT	6D				
74S74	6K	14	7	NE592	3H		10		5
74DB6	5F	14	7	TRQ2907	4K	–	–	–	–
26LS31	6G	16	8						
26LS32	6J	16	8						
74LS3	3C	16	8						
R/PACK	6E	14	7						

PART NO
20099-001

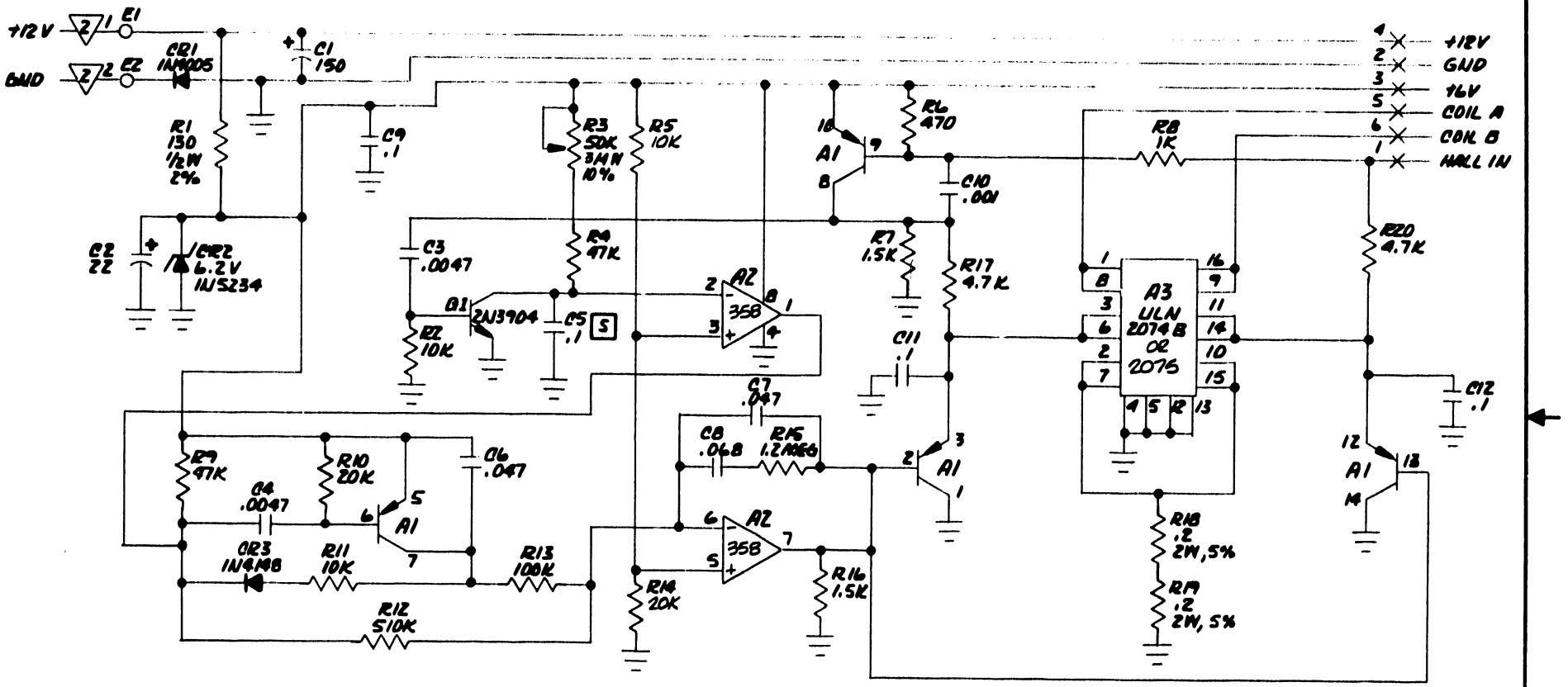

NOTES UNLESS OTHERWISE SPECIFIED.
1. ALL RESISTORS ARE IN OHMS 1/4W, 5%.
2. ALL CAPACITORS ARE IN MICROFARADS, 10%.
3 —X— INDICATES J1
4 —2— INDICATES J2.
[5] C5, POLYCARBONATE 50V, ±10%.

MUST CONFORM TO ENGINEERING SPEC. 30130-001				EC HISTORY		
MATERIAL:		TOLERANCE UNLESS OTHERWISE NOTED		DATE	NO.	TITLE PWB ASSY-MOTOR CONTROL (SCHEMATIC)
				12-17-81	0144	
		LINEAR	±.XX	3-8-82	0221	DETAIL
			±.XXX	3-17-82	0234	DESIGN
HARDNESS		ANGULAR±		5-27-82	0320	APPRO
SURFACE TREATMENT	ES	CORNERS EDGES BROKEN	OUTSIDE MAX	10-15-82	0502	B
			INSIDE MAX			SCALE —

RELEASED FOR ASSEMBLY

SHEET 6 OF 6

PART NO 20099-001

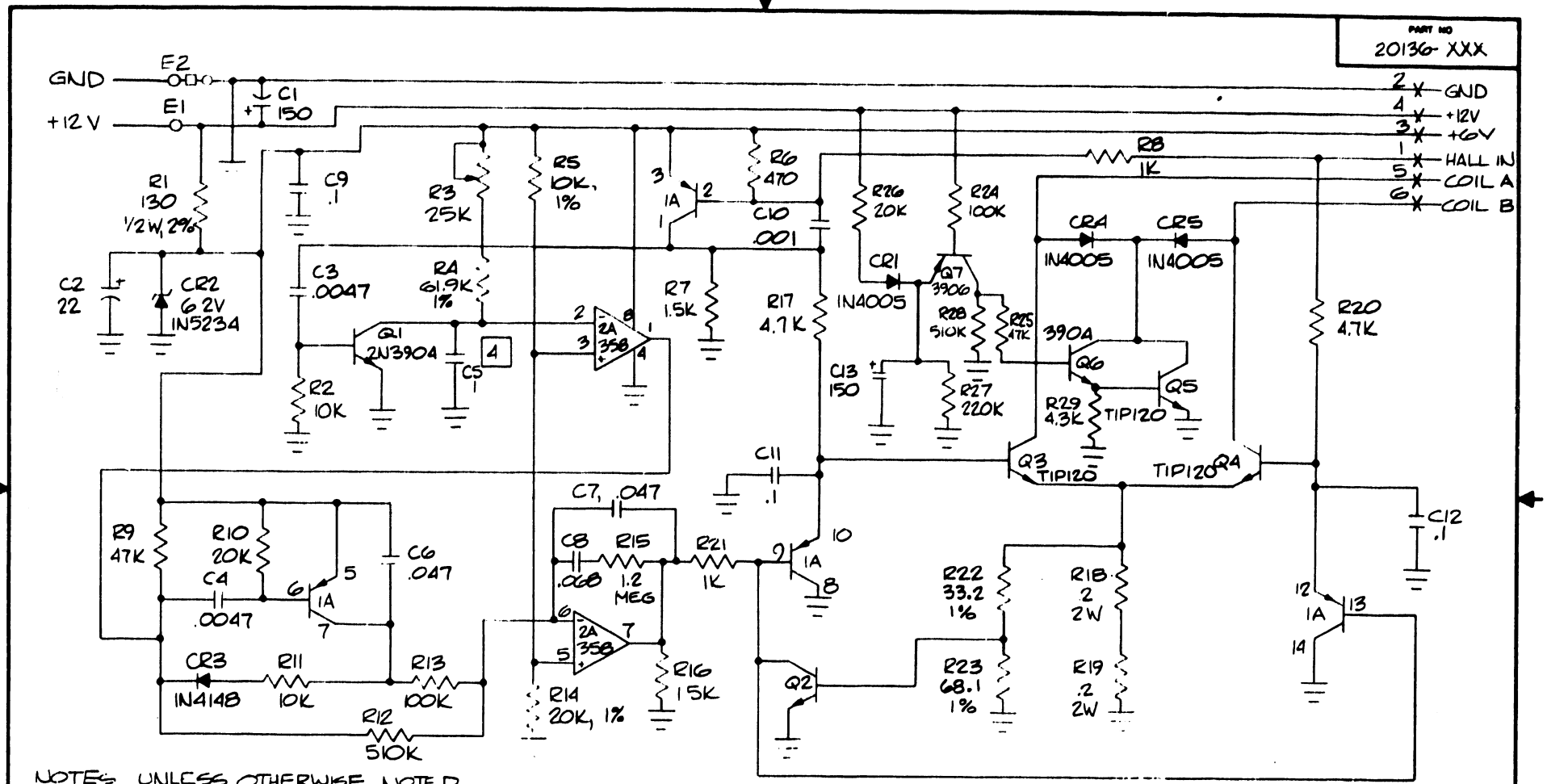

NOTES UNLESS OTHERWISE NOTED
1 ALL RESISTORS ARE IN OHMS, 1/4 W. 5%
2 ALL CAPACITORS ARE IN MICROFARADS, 10%
3 —×— INDICATES J1.
[4] C5 - POLYCARBONATE, 50V ± 10%

MUST CONFORM TO ENGINEERING SPEC. 30130-001		EC HISTORY				
MATERIAL:	TOLERANCE UNLESS OTHERWISE NOTED	DATE	NO.	TITLE	PWB ASSY. MTR CONTROL (SCHEMATIC)	
		9-30-82	0487			
	LINEAR ±.XX	11-11-82	0539	DETAIL	SF	6 28 82 RELEASED FOR ASSEMBLY
	±.XXX	12-30-82	0609	DESIGN		
HARDNESS	ANGULAR±	1-13-83	0636	APPRO		SHEET 7 OF 7
SURFACE TREATMENT ES	CORNERS EDGES BROKEN OUTSIDE MAX			B	SCALE —	PART NO 20136-001
	INSIDE MAX					

WANG LABORATORIES, INC.

ONE INDUSTRIAL AVENUE, LOWELL, MASSACHUSETTS 01851, TEL. (617) 459-5000, TWX 710 343-6769, TELEX 94-7421

PRINTED IN U.S.A.

END